PROJECT NO.	SHEET NO.
MAPA-5023(17)	1
◣ CONTROL NO. 22608	
▲ CONTROL NO. 22608	
■ CONTROL NO.	

INDEX OF SHEETS

SHEET NO.

1	TITLE PAGE
2-S	SUMMARY OF QUANTITIES
2-N1 - 2-N13	GENERAL INFORMATION
3 - 12	PLAN SHEETS--INTERCONNECT
13 - 25	PLAN SHEETS--INTERNAL FIBER PLAN

STANDARD PLANS

920-R6	(3 SHEETS) TRAFFIC CONTROL, CONSTRUCTION AND MAINTENANCE
924-R1	(3 SHEETS) TYPICAL URBAN TRAFFIC CONTROL PLAN

STATE OF NEBRASKA

DEPARTMENT OF ROADS

PLANS FOR CONSTRUCTION

OMAHA SIGNAL SYSTEM PHASE 0

DOUGLAS COUNTY

THE 2007 EDITION OF THE NEBRASKA STANDARD SPECIFICATIONS AND THE SPECIAL PROVISIONS APPLY TO THIS PROJECT.

THE WORK ON THIS PROJECT CONSISTS OF GROUPS

8B-ELECTRICAL

WITHDRAWN

◣ GROUPS 8B ARE INCLUDED IN THE LETTING OF NOVEMBER 10, 2016

▲ GROUPS 8B ARE INCLUDED IN THE LETTING OF MARCH 2, 2017

■ GROUPS _____ ARE INCLUDED IN THE LETTING OF _____

SITE NUMBER	PROJECT SITE
1	FIRE STATION #3 3126 SOUTH 16th ST.
2	FIRE STATION #21 3454 AMES AVE.
3	FIRE STATION #34 956 SOUTH 48th ST.
4	FIRE STATION #43 5505 NORTH 103rd ST.
5	FIRE STATION #52 10727 PACIFIC ST.
6	FIRE STATION #53 8001 DODGE ST.
7	FIRE STATION #63 16736 "S" ST.
8	FIRE STATION #71 20474 LARAMIE RD.
9	FIRE STATION #78 2909 NORTH 144th ST.
10	SOUTHWEST MAINTENANCE FACILITY 4040 SOUTH 96th ST.
11	FIRE STATION #1 1516 JACKSON ST.
12	TRAFFIC MAINTENANCE FACILITY 4303 SOUTH 50th ST.
13	CIVIC CENTER 1819 FARNAM ST.

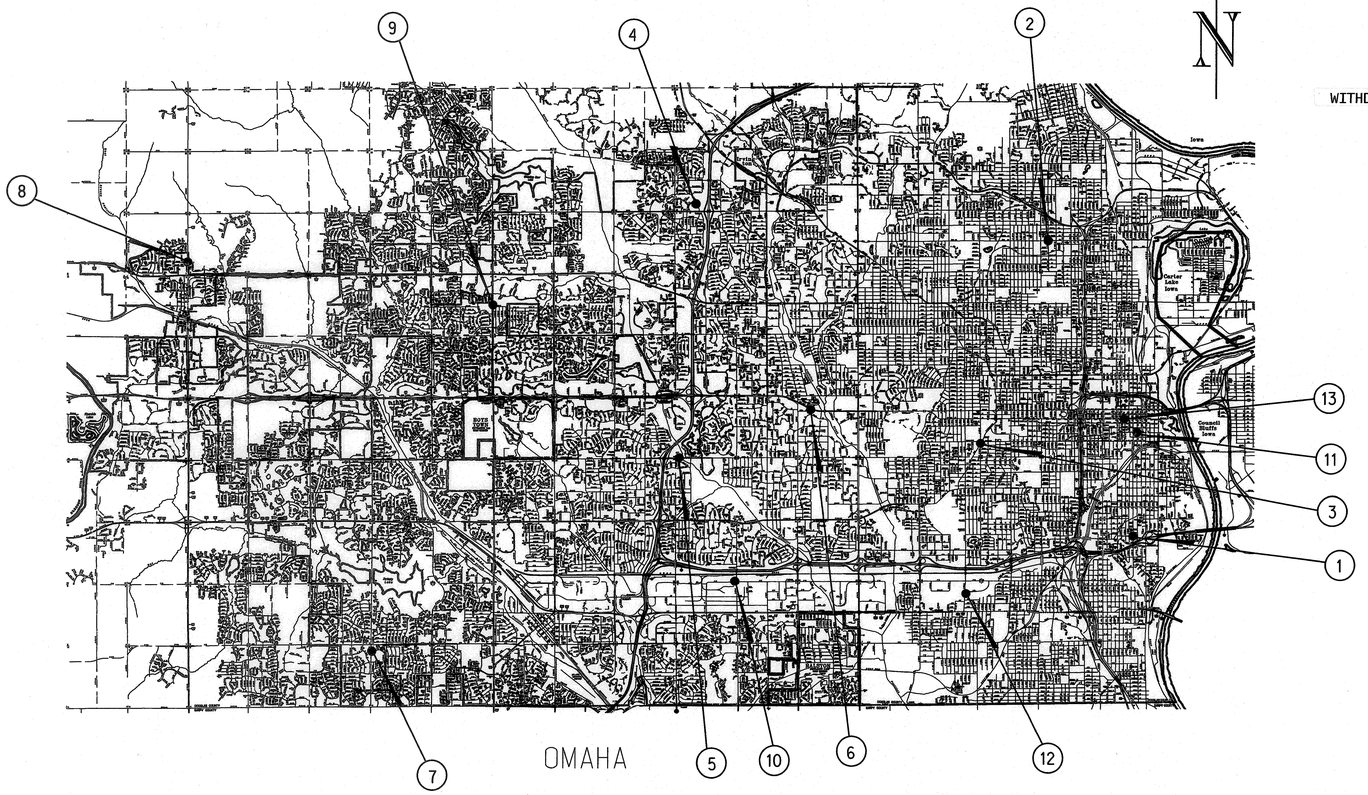

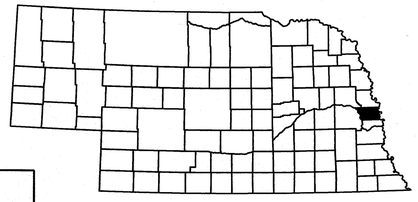

CONVENTIONAL SIGNS

FENCE R.O.W. OR WIRE
GUARDRAIL
TRAVELED WAY
DIKE
CULVERT
POWER POLE
TELEPHONE POLE
MAILBOX
RAILROAD TRACKS
MARSH
TREE - CONIFEROUS
TREE - DECIDUOUS

R.O.W. LEGEND

NEW CONTROLLED ACCESS
PREVIOUS CONTROLLED ACCESS
LIMITS OF CONSTRUCTION
PREVIOUS R.O.W.
NEW R.O.W.
EXISTING PERMANENT EASEMENT
TEMPORARY EASEMENT
EXCESS TAKING
PERMANENT EASEMENT
EXISTING RAILROAD EASEMENT
NEW RAILROAD PERMANENT EASEMENT
NEW RAILROAD TEMPORARY EASEMENT

REFERENCE POST NO. TO REFERENCE POST NO.

EXCEPTIONS: FROM STA. TO STA.

TOTAL NET LENGTH OF PROJECT: FEET MILES

PROFESSIONAL CIVIL ENGINEER BRYAN P. GOY E-13003 STATE OF NEBRASKA 9/16/16

PROFESSIONAL CIVIL ENGINEER MICHAEL H. STOLTENBERG E-6505 STATE OF NEBRASKA 9-16-16

COORDINATING PROFESSIONAL

CONSTRUCTION DIVISION
Computer: DRCONSTRUCT04
User: dor10027
Date: 16-SEP-2016 09:54
File: 22608OPSETTITLE.DGN
Scale: 1:97.2222

PROJECT NO.	SHEET NO.
5023(17)	2-S

C.N. 22608

SUMMARY OF QUANTITIES

ELECTRICAL ITEMS
GROUP 8B

ITEM	QUANTITY	UNITS
BARRICADE, TYPE II	460.000	BDAY
TEMPORARY SIGN DAY	69.000	EACH
FLASHING ARROW PANEL	23.000	DAY
FLAGGING	10.000	DAY
TRAINING	100.000	HOUR
MOBILIZATION	1.000	LS
TERMINATED FIBER CONNECTOR (SC TYPE)	672.000	EACH
FIBER OPTIC SPLICE CLOSURE	3.000	EACH
CIVIC CENTER LAYER 3 SWITCH/ROUTER	1.000	EACH
ENCLOSED WALL MOUNTED CABINET- 24U	11.000	EACH
POWER DISTRIBUTION UNIT (PDU)	13.000	EACH
FIELD LAYER 3 SWITCH/ROUTER	13.000	EACH
48-STRAND SINGLE MODE FIBER OPTIC CABLE	17,669.000	LF
RACK MOUNTED FIBER DISTRIBUTION UNIT (FDU)- 96 FIBER	13.000	EACH
BATTERY BACK-UP UNIT	4.000	EACH
ENVIRONMENTAL COMMITMENTS - CONTRACTOR COMPLIANCE	1.000	LS

PROFESSIONAL CIVIL ENGINEER
MICHAEL H. SCHLTENBERG
E-6505
STATE OF NEBRASKA

CONSTRUCTION DIVISION
Computer: DRCONSTRUCT04
User: dor10027
Date: 13-SEP-2016 09:00
File: 22608OPSESUMMARY.DGN
Scale: 1:97.2222

PROJECT NO.	SHEET NO.
MAPA-5023(17)	2-N1
C.N. 22608	

Wall Mounted Enclosure - 24U
(48H"x24W"x42"D)

96 Count Fiber Distribution Unit (FDU)

Fiber Ethernet Switch - Layer 3 (INSTALLED BY OTHERS)

Power Distribution Unit (PDU)

BATTERY BACK-UP UNIT

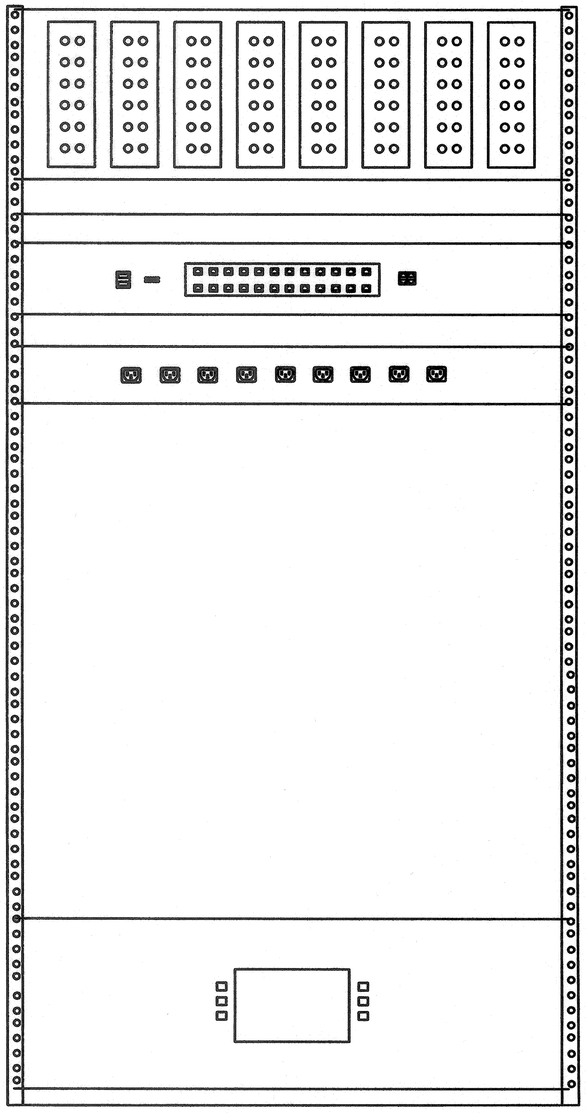

1U Open for Air Ventilation

1U Open for Air Ventilation

Approximately 6-8U available for other equipment

Note: New or integrate with existing facility infrastructure.
See Hub Location plans.

PROFESSIONAL CIVIL ENGINEER
BRYAN P. GUY
E-13003
STATE OF NEBRASKA

FILENAME: X:_C3D 2015 PROJECTS\OPW XXXXX Conduit at Various Fire Stations\CAD\Base Drawings\OPW XXXXX Fiber Install Plans.dwg
DATE PLOTTED: 6/21/2016 11:04 AM DRAWN BY: TLJ PLOT SCALE: 50:1

GENERAL INFORMATION

PROJECT NO.	SHEET NO.
MAPA-5023(17)	2-N2

C.N. 22608

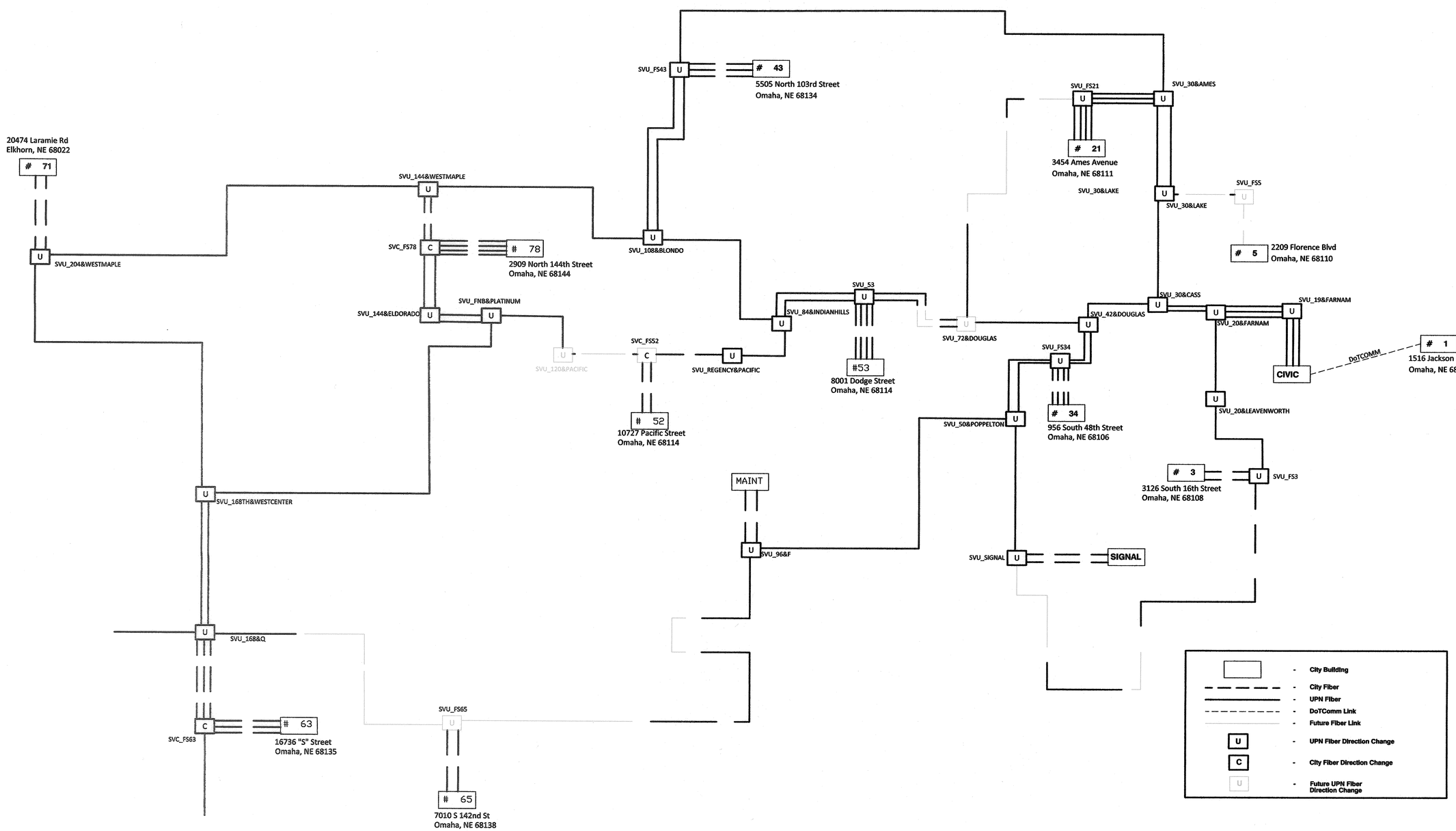

PROFESSIONAL CIVIL ENGINEER
BRYAN A. GUY
E-13003
9/21/16
STATE OF NEBRASKA

50 25 0 50
GRAPHIC SCALE : FEET

PHYSICAL ARCHITECTURE

FILENAME: X:_C3D 2015 PROJECTS\OPW XXXXX Conduit at Various Fire Stations\CAD\Base Drawings\OPW XXXX Fiber install Plans.dwg
DATE PLOTTED: 9/21/2016 11:05 AM DRAWN BY: TLJ PLOT SCALE: 50:1

PROJECT NO.	SHEET NO.
MAPA-5023(17)	2-N3
C.N. 22608	

SVU_19&FARNAM

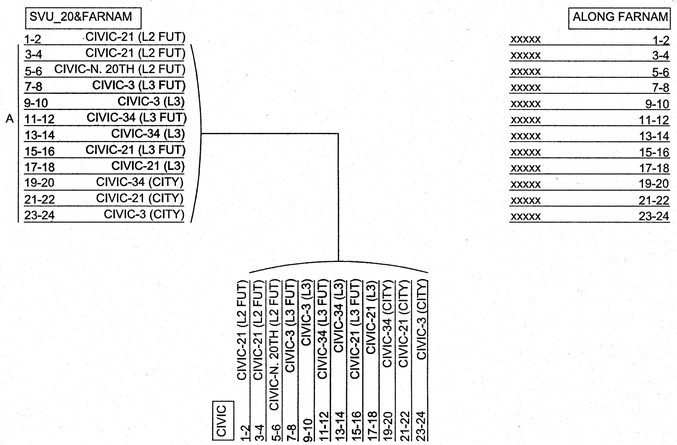

SVU_20&FARNAM

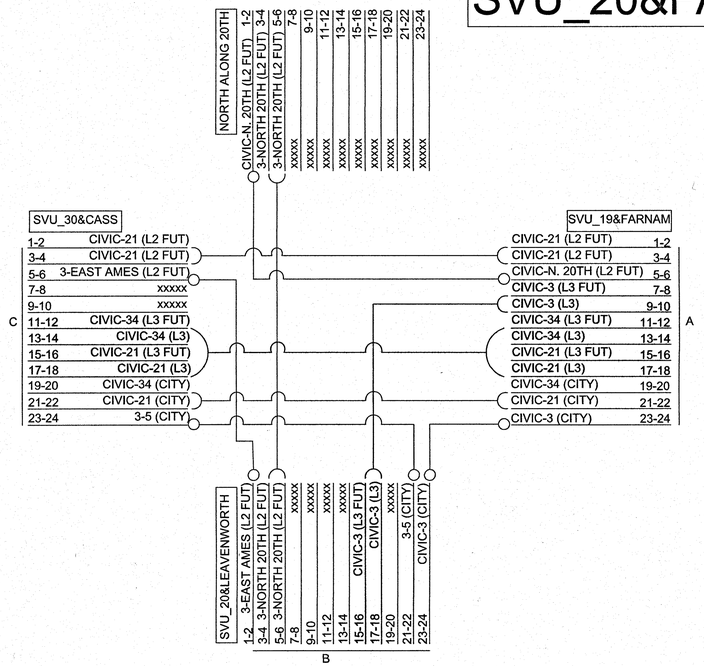

SVU_20&LEAVENWORTH

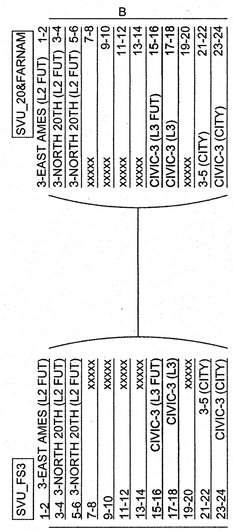

SVU_FS3

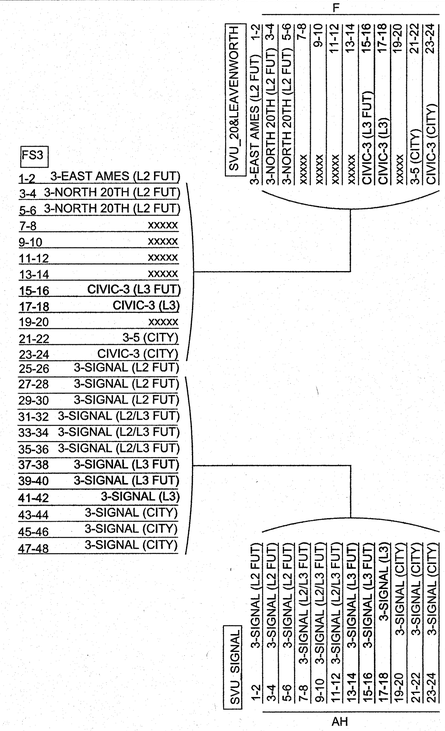

OMAHA LAYER III
SPLICE DIAGRAMS

GENERAL INFORMATION

PROFESSIONAL CIVIL ENGINEER
BRYAN J. COY
E-13003
9/14/16
STATE OF NEBRASKA

FILENAME: X:_C3D 2015 PROJECTS\OPW XXXXX Conduit at Various Fire Stations\CAD\Base Drawings\2.5.2016_UPN_FIBER_SPLICING_DIAGRAMS.dwg
DATE PLOTTED: 6/21/2016 11:08 AM DRAWN BY: TLJ PLOT SCALE: 50:1

PROJECT NO.	SHEET NO.
MAPA-5023(17)	2-N4

C.N. 22608

SVU_SIGNAL

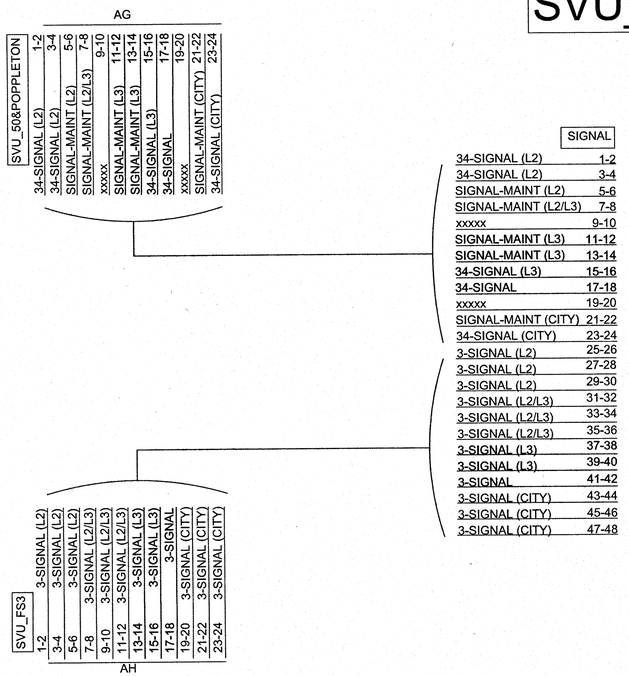

SVU_50&POPPLETON

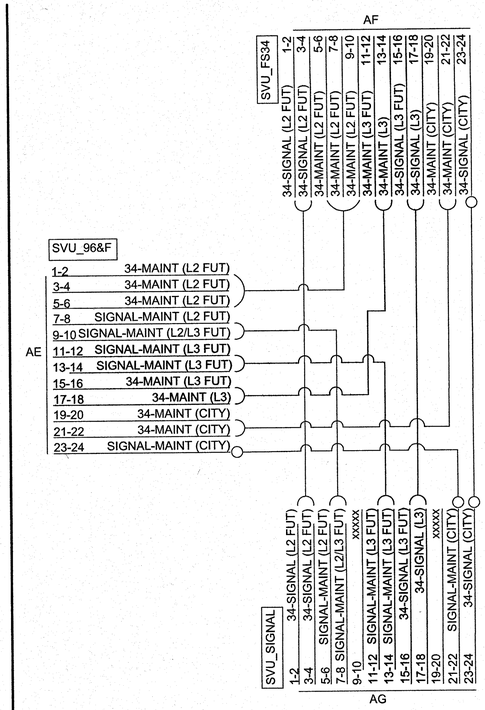

SVU_FS34

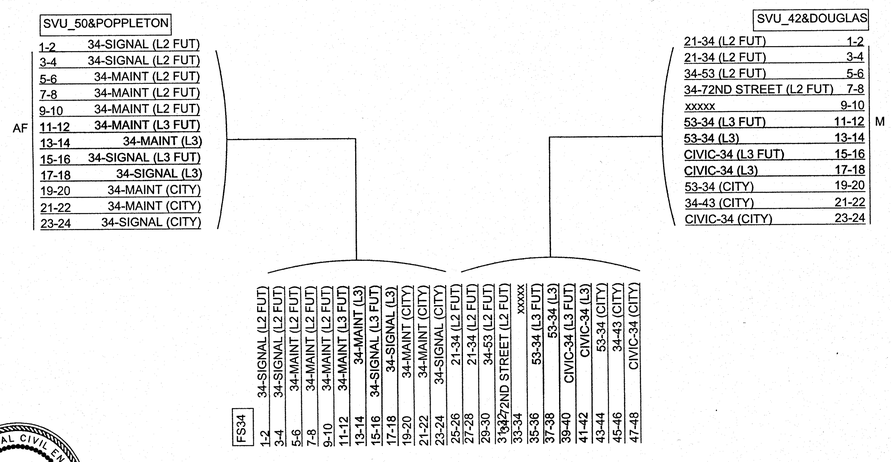

SVU_42&DOUGLAS

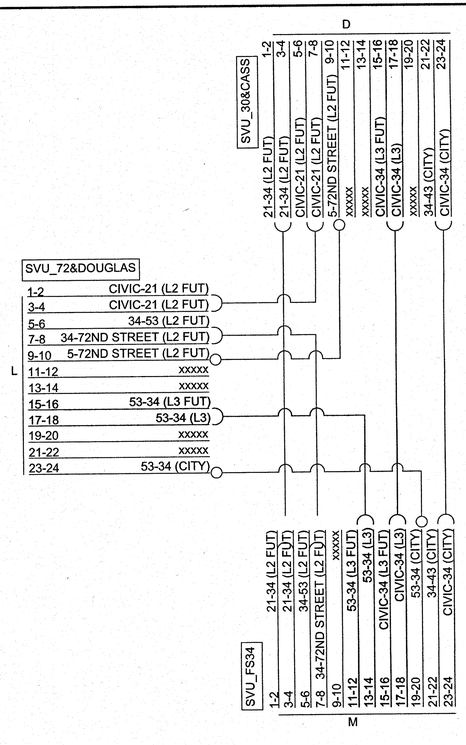

OMAHA LAYER III
SPLICE DIAGRAMS

GENERAL INFORMATION

FILENAME: X:_C3D 2015 PROJECTS\OPW XXXXX Conduit at Various Fire Stations\CAD\Base Drawings\2.5.2016_UPN_FIBER_SPLICING_DIAGRAMS.dwg
DATE PLOTTED: 6/21/2016 11:09 AM DRAWN BY: TLJ PLOT SCALE: 50:1

PROJECT NO.	SHEET NO.
MAPA-5023(17)	2-N5
C.N. 22608	

SVU_30&CASS

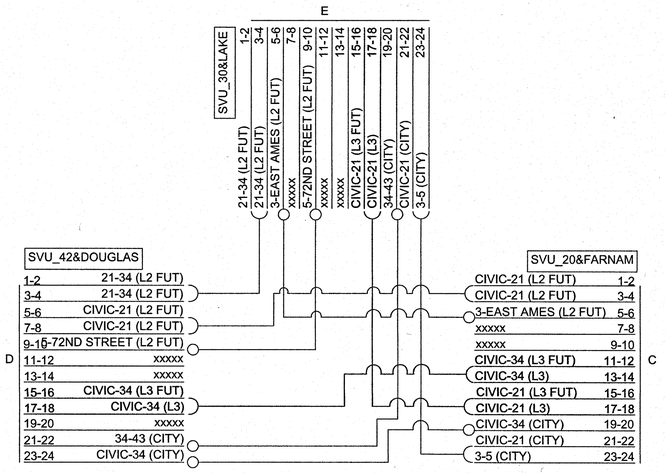

SVU_30&LAKE

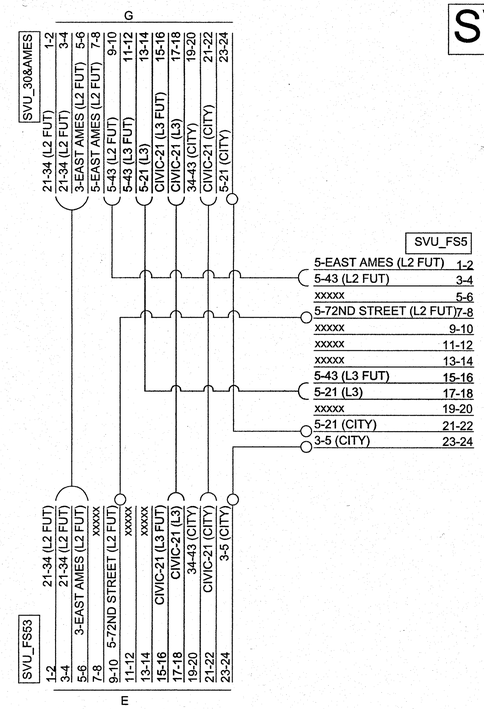

SVU_30&AMES

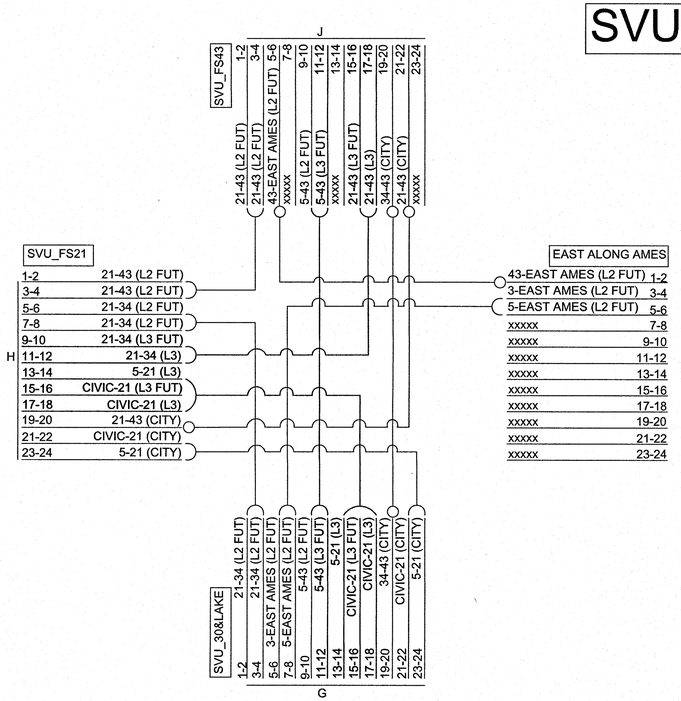

SVU_FS21

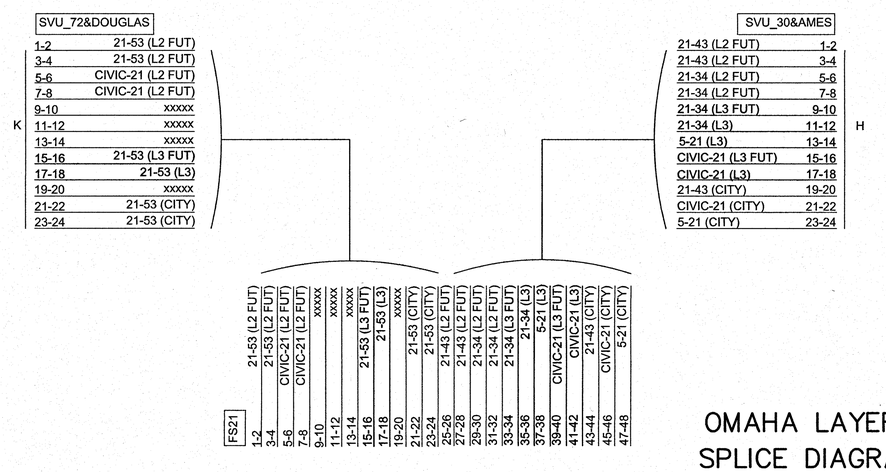

OMAHA LAYER III
SPLICE DIAGRAMS

GENERAL INFORMATION

PROFESSIONAL CIVIL ENGINEER
BRYAN K. GUY
E-13003
9/14/16
STATE OF NEBRASKA

FILENAME: X:_C3D 2015 PROJECTS\OPW XXXXX Conduit at Various Fire Stations\CAD\Base Drawings\2.5.2016_UPN_FIBER_SPLICING_DIAGRAMS.dwg
DATE PLOTTED: 6/21/2016 11:08 AM DRAWN BY: TLJ PLOT SCALE: 50:1

PROJECT NO.	SHEET NO.
MAPA-5023(17)	2-N6
C.N. 22608	

SVU_72&DOUGLAS

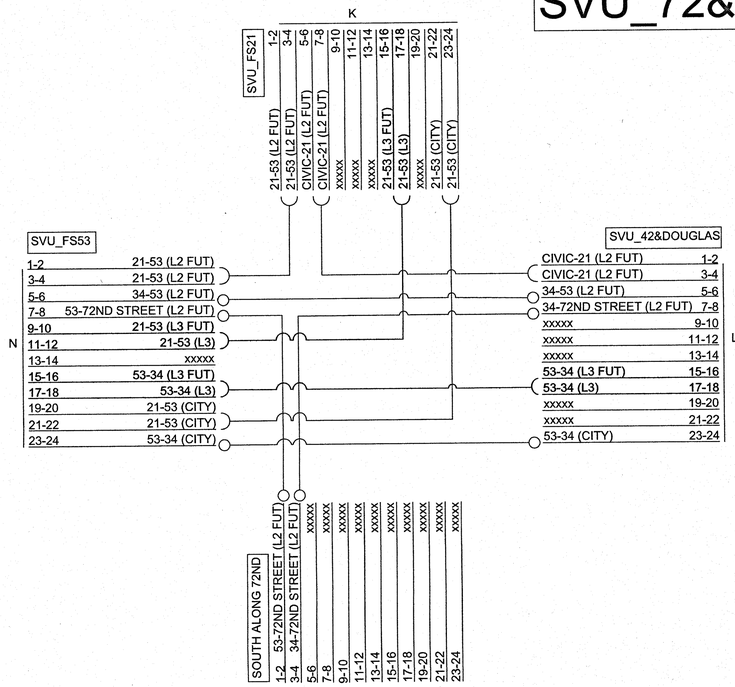

SVU_FS53

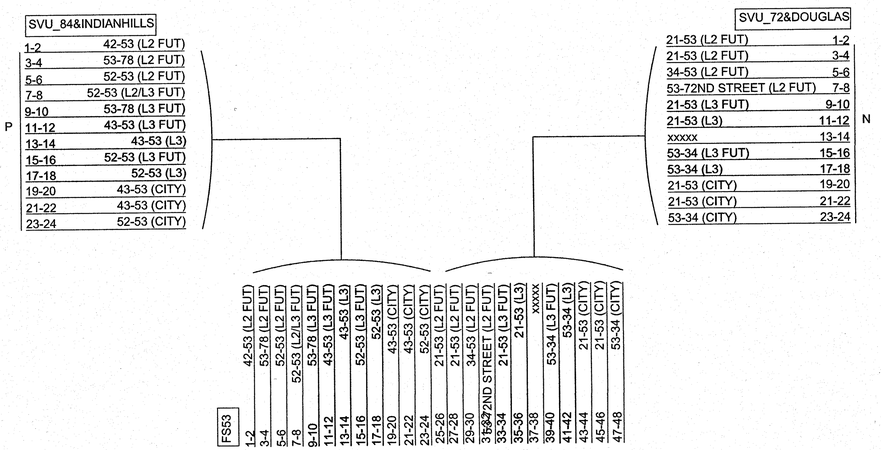

SVU_84&INDIANHILLS

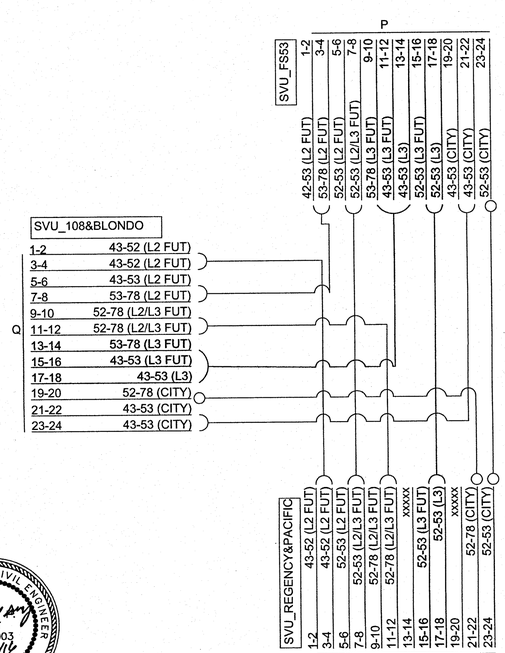

SVU_REGENCY&PACIFIC

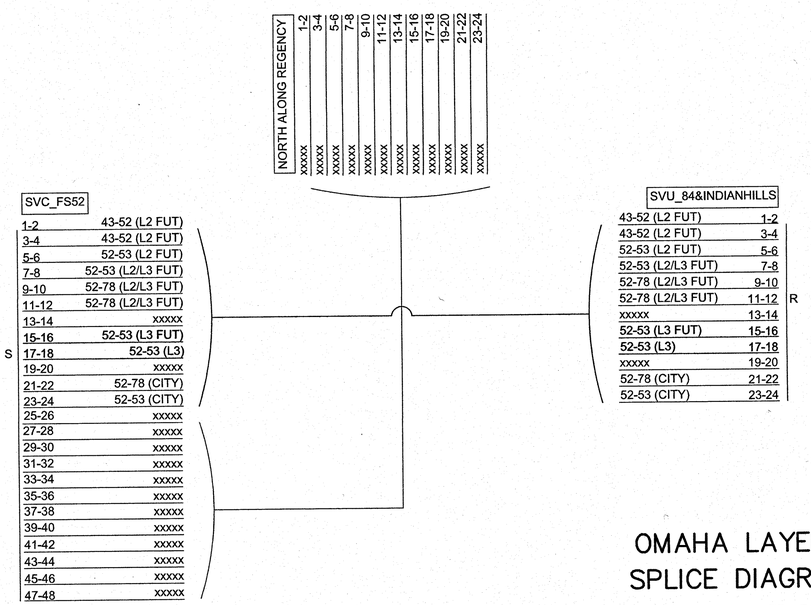

OMAHA LAYER III
SPLICE DIAGRAMS
GENERAL INFORMATION

PROFESSIONAL CIVIL ENGINEER
BRIAN A. GUY
E-13003
STATE OF NEBRASKA
9/19/16

FILENAME: X:_C3D 2015 PROJECTS\OPW XXXXX Conduit at Various Fire Stations\CAD\Base Drawings\2.5.2016_UPN_FIBER_SPLICING_DIAGRAMS.dwg
DATE PLOTTED: 6/21/2016 11:08 AM DRAWN BY: TLJ PLOT SCALE: 50:1

PROJECT NO.	SHEET NO.
MAPA-5023(17)	2-N7
C.N. 22608	

SVC_FS52

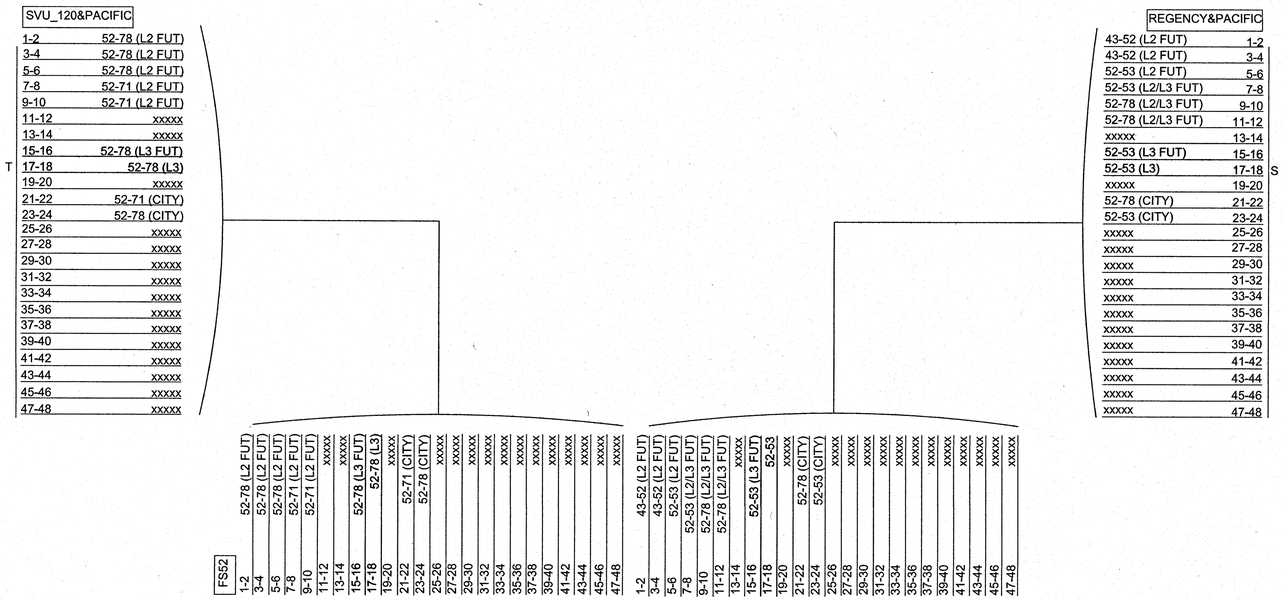

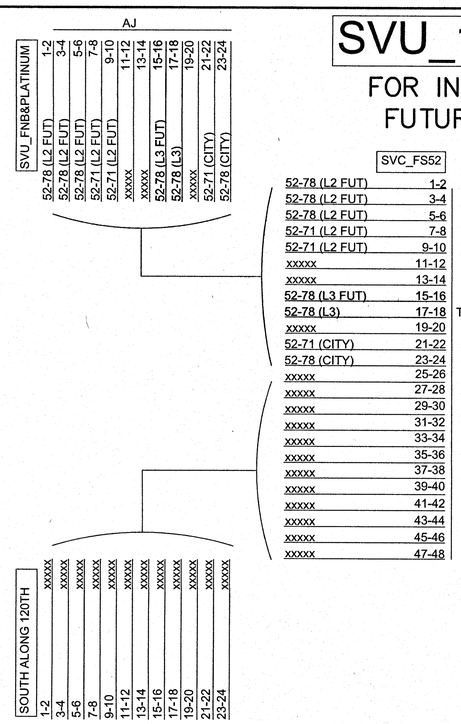

SVU_120&PACIFIC

FOR INFORMATION ONLY
FUTURE FIBER SPLICE

SVU_FNB&PLATINUM

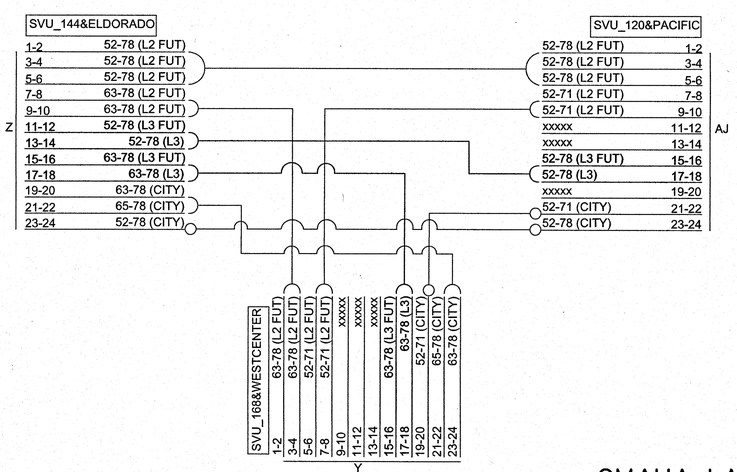

OMAHA LAYER III
SPLICE DIAGRAMS

GENERAL INFORMATION

PROFESSIONAL CIVIL ENGINEER
BRYAN D. TUCY
E-13003
STATE OF NEBRASKA

FILENAME: X:_CSD 2015 PROJECTS\OPW XXXXX Conduit at Various Fire Stations\CAD\Base Drawings\2.5.2016_UPN_FIBER_SPLICING_DIAGRAMS.dwg
DATE PLOTTED: 6/21/2016 11:09 AM DRAWN BY: TLJ PLOT SCALE: 50:1

PROJECT NO.	SHEET NO.
MAPA-5023(17)	2-N8

C.N. 22608

SVC_FS78

AL

SVU_144&WESTMAPLE	
71-78 (L2 FUT)	1-2
71-78 (L2 FUT)	3-4
71-78 (L2 FUT)	5-6
71-78 (L2/L3 FUT)	7-8
71-78 (L2/L3 FUT)	9-10
71-78 (L2/L3 FUT)	11-12
71-78 (L3 FUT)	13-14
71-78 (L3 FUT)	15-16
71-78 (L3)	17-18
71-78 (CITY)	19-20
71-78 (CITY)	21-22
71-78 (CITY)	23-24
43-78 (L2 FUT)	25-26
43-78 (L2 FUT)	27-28
78-108TH (L2 FUT)	29-30
53-78 (L2 FUT)	31-32
52-78 (L2/L3 FUT)	33-34
52-78 (L2/L3 FUT)	35-36
53-78 (L3 FUT)	37-38
43-78 (L3 FUT)	39-40
43-78 (L3)	41-42
52-78 (CITY)	43-44
xxxxx	45-46
43-78 (CITY)	47-48

FS78	
71-78 (L2 FUT)	1-2
71-78 (L2 FUT)	3-4
71-78 (L2 FUT)	5-6
71-78 (L2/L3 FUT)	7-8
71-78 (L2/L3 FUT)	9-10
71-78 (L2/L3 FUT)	11-12
71-78 (L3 FUT)	13-14
71-78 (L3 FUT)	15-16
71-78 (L3)	17-18
71-78 (CITY)	19-20
71-78 (CITY)	21-22
71-78 (CITY)	23-24
43-78 (L2 FUT)	25-26
43-78 (L2 FUT)	27-28
78-108TH (L2 FUT)	29-30
53-78 (L2 FUT)	31-32
52-78 (L2/L3 FUT)	33-34
52-78 (L2/L3 FUT)	35-36
53-78 (L3 FUT)	37-38
43-78 (L3 FUT)	39-40
43-78 (L3)	41-42
52-78 (CITY)	43-44
xxxxx	45-46
43-78 (CITY)	47-48

EXIST DO NOT DISTURB	1-2
EXIST DO NOT DISTURB	3-4
EXIST DO NOT DISTURB	5-6
78-WEST ELDOR(L2 FUT)	7-8
78-WEST ELDOR(L2 FUT)	9-10
78-WEST ELDOR(L2 FUT)	11-12
52-78 (L2 FUT)	13-14
52-78 (L2 FUT)	15-16
52-78 (L2 FUT)	17-18
63-78 (L2 FUT)	19-20
63-78 (L2 FUT)	21-22
52-78 (L3 FUT)	23-24
52-78 (L3)	25-26
63-78 (L3 FUT)	27-28
63-78 (L3)	29-30
63-78 (CITY)	31-32
65-78 (CITY)	33-34
52-78 (CITY)	35-36
xxxxx	37-38
xxxxx	39-40
xxxxx	41-42
xxxxx	43-44
xxxxx	45-46
xxxxx	47-48

SVU_144&ELDORADO	
1-2	EXIST DO NOT DISTURB
3-4	EXIST DO NOT DISTURB
5-6	EXIST DO NOT DISTURB
7-8	78-WEST ELDOR(L2 FUT)
9-10	78-WEST ELDOR(L2 FUT)
11-12	78-WEST ELDOR(L2 FUT)
13-14	52-78 (L2 FUT)
15-16	52-78 (L2 FUT)
17-18	52-78 (L2 FUT)
19-20	63-78 (L2 FUT)
21-22	63-78 (L2 FUT)
23-24	52-78 (L3 FUT)
25-26	52-78 (L3)
27-28	63-78 (L3 FUT)
29-30	63-78 (L3)
31-32	63-78 (CITY)
33-34	65-78 (CITY)
35-36	52-78 (CITY)

AK

PROFESSIONAL CIVIL ENGINEER
BRYAN J. LEMPKA
E-13003
9/14/16
STATE OF NEBRASKA

FILENAME: X:_C3D 2015 PROJECTS\OPW XXXXX Conduit at Various Fire Stations\CAD\Base Drawings\25.2016_UPN_FIBER_SPLICING_DIAGRAMS.dwg
DATE PLOTTED: 6/21/2016 11:09 AM DRAWN BY: TLJ PLOT SCALE: 50:1

SVU_144&WESTMAPLE

SVU_240&WESTMAPLE	
1-2	71-78 (L2 FUT)
3-4	71-78 (L2 FUT)
5-6	71-78 (L2 FUT)
7-8	71-78 (L2/L3 FUT)
9-10	71-78 (L2/L3 FUT)
11-12	71-78 (L2/L3 FUT)
13-14	71-78 (L3 FUT)
15-16	71-78 (L3 FUT)
17-18	71-78 (L3)
19-20	71-78 (CITY)
21-22	71-78 (CITY)
23-24	71-78 (CITY)

W

SVU_108&BLONDO	
43-78 (L2 FUT)	1-2
43-78 (L2 FUT)	3-4
78-108TH (L2 FUT)	5-6
53-78 (L2 FUT)	7-8
52-78 (L2/L3 FUT)	9-10
52-78 (L2/L3 FUT)	11-12
53-78 (L3 FUT)	13-14
43-78 (L3 FUT)	15-16
43-78 (L3)	17-18
52-78 (CITY)	19-20
xxxxx	21-22
43-78 (CITY)	23-24

V

SVC_FS78	
1-2	71-78 (L2 FUT)
3-4	71-78 (L2 FUT)
5-6	71-78 (L2 FUT)
7-8	71-78 (L2/L3 FUT)
9-10	71-78 (L2/L3 FUT)
11-12	71-78 (L2/L3 FUT)
13-14	71-78 (L3 FUT)
15-16	71-78 (L3 FUT)
17-18	71-78 (L3)
19-20	71-78 (CITY)
21-22	71-78 (CITY)
23-24	71-78 (CITY)
25-26	43-78 (L2 FUT)
27-28	43-78 (L2 FUT)
29-30	78-108TH (L2 FUT)
31-32	53-78 (L2 FUT)
33-34	52-78 (L2/L3 FUT)
35-36	52-78 (L2/L3 FUT)
37-38	53-78 (L3 FUT)
39-40	43-78 (L3 FUT)
41-42	43-78 (L3)
43-44	52-78 (CITY)
45-46	xxxxx
47-48	43-78 (CITY)

AL

OMAHA LAYER III
SPLICE DIAGRAMS

GENERAL INFORMATION

PROJECT NO.	SHEET NO.
MAPA-5023(17)	2-N9

C.N. 22608

SVC_144&ELDORADO

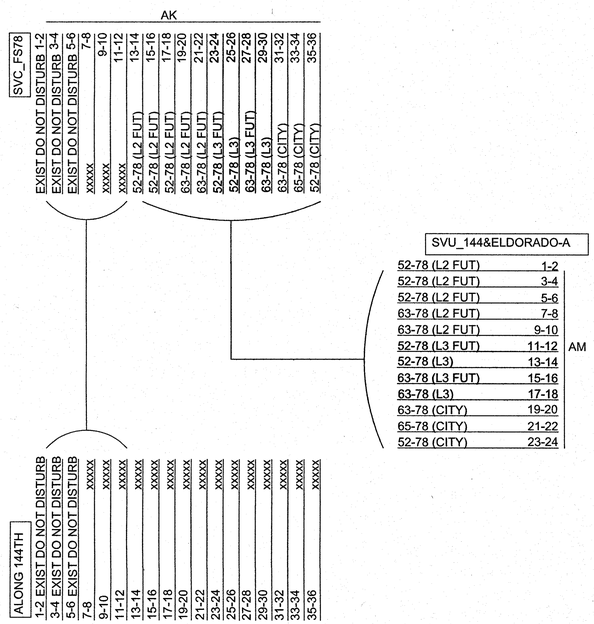

SVU_144&ELDORADO-A

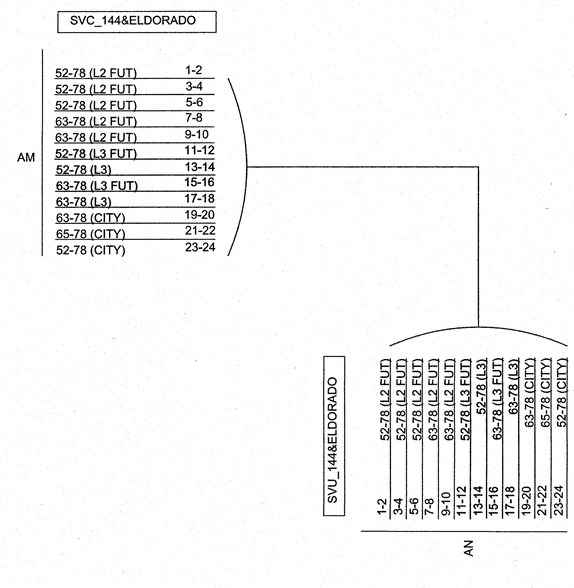

SVU_144&ELDORADO

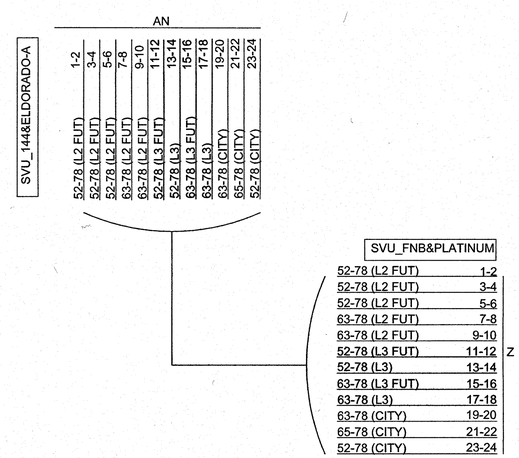

OMAHA LAYER III
SPLICE DIAGRAMS

GENERAL INFORMATION

FILENAME: X:_C3D 2015 PROJECTS\OPW XXXXX Conduit at Various Fire Stations\CAD\Base Drawings\2.5.2016_UPN_FIBER_SPLICING_DIAGRAMS.dwg
DATE PLOTTED: 6/21/2016 11:09 AM DRAWN BY: TLJ PLOT SCALE: 50:1

PROFESSIONAL CIVIL ENGINEER
BRYAN GUY
E-13003
9/1/16
STATE OF NEBRASKA

PROJECT NO.	SHEET NO.
MAPA-5023(17)	2-N10
C.N. 22608	

SVU_108&BLONDO

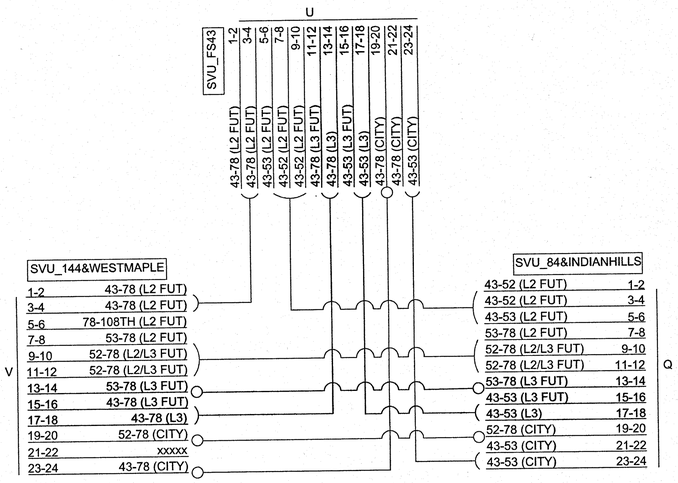

SVU_FS43

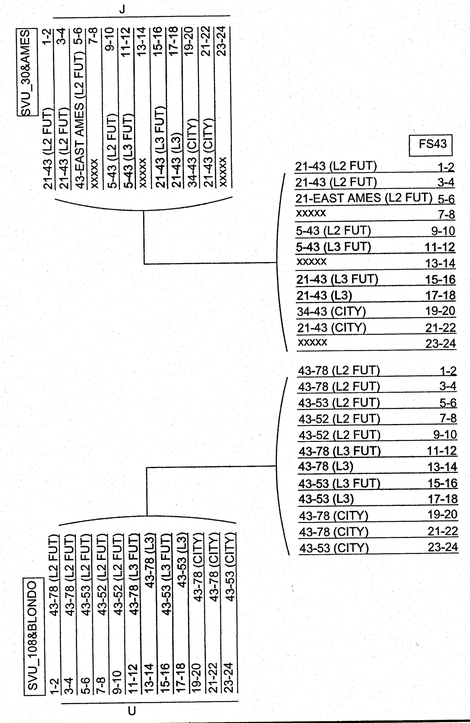

SVU_204&WESTMAPLE

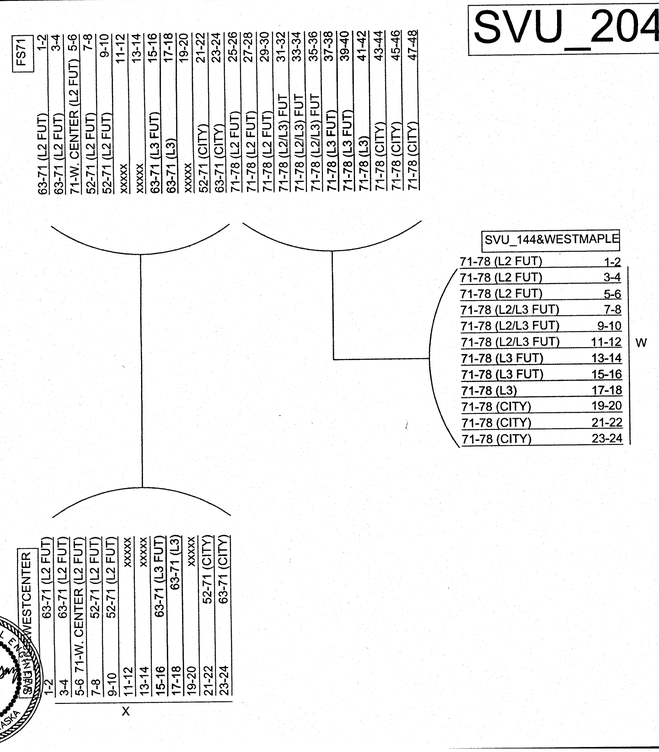

SVU_168&WESTCENTER

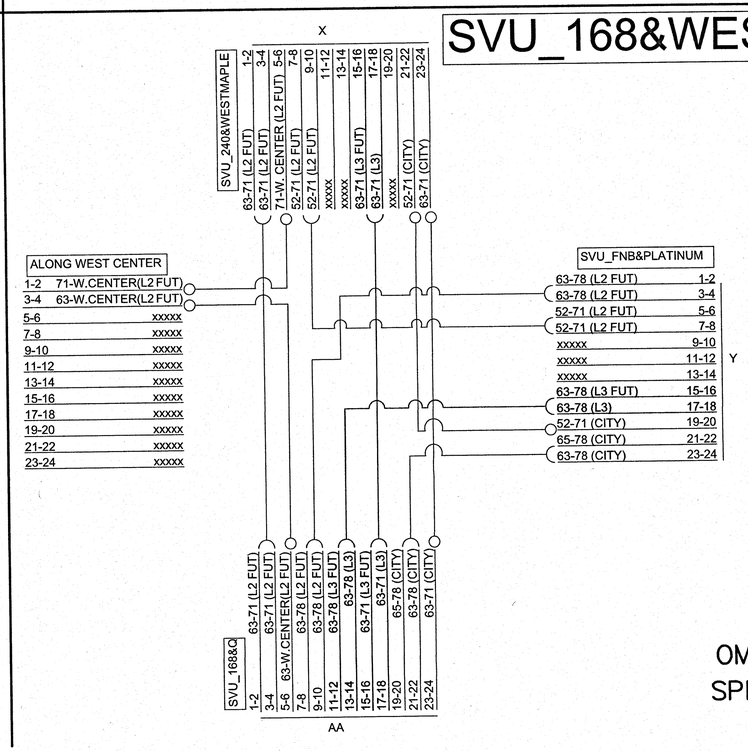

OMAHA LAYER III
SPLICE DIAGRAMS
GENERAL INFORMATION

PROFESSIONAL CIVIL ENGINEER
BRYAN L. LUEDKE
13003
STATE OF NEBRASKA
9/15/16

LENAME: X:_C3D 2015 PROJECTS\OPW XXXXX Conduit at Various Fire Stations\CAD\Base
rawings\2.5.2016_UPN_FIBER_SPLICING_DIAGRAMS.dwg
ATE PLOTTED: 6/21/2016 11:10 AM DRAWN BY: TLJ PLOT SCALE: 50:1

PROJECT NO.	SHEET NO.
MAPA-5023(17)	2-N11

C.N. 22608

SVC_FS63

SVU_168&Q

65-WEST ON Q (L2 FUT)	1-2
65-WEST ON Q (L2 FUT)	3-4
xxxxx	5-6
xxxxx	7-8
xxxxx	9-10
xxxxx	11-12
xxxxx	13-14
xxxxx	15-16
xxxxx	17-18
xxxxx	19-20
xxxxx	21-22
xxxxx	23-24
63-71 (L2 FUT)	25-26
63-71 (L2 FUT)	27-28
63-W.CENTER(L2 FUT)	29-30
63-78 (L2 FUT)	31-32
63-78 (L2 FUT)	33-34
63-78 (L3 FUT)	35-36
63-78 (L3)	37-38
63-71 (L3 FUT)	39-40
63-71 (L3)	41-42
65-78 (CITY)	43-44
63-78 (CITY)	45-46
63-71 (CITY)	47-48

AC

63-65 (L2 FUT)	1-2
63-65 (L2 FUT)	3-4
65-WEST ON Q (L2 FUT)	5-6
65-WEST ON Q (L2 FUT)	7-8
xxxxx	9-10
xxxxx	11-12
63-65 (L2/L3 FUT)	13-14
63-65 (L3 FUT)	15-16
63-65 (L3)	17-18
65-78 (CITY)	19-20
63-65 (CITY)	21-22
63-65 (CITY)	23-24
	25-26
	27-28
	29-30
	31-32
	33-34
	35-36
	37-38
	39-40
	41-42
	43-44
	45-46
	47-48

ALONG 168TH STREET

1-2	xxxxx
3-4	xxxxx
5-6	xxxxx
7-8	xxxxx
9-10	xxxxx
11-12	xxxxx
13-14	xxxxx
15-16	xxxxx
17-18	xxxxx
19-20	xxxxx
21-22	xxxxx
23-24	xxxxx
25-26	xxxxx
27-28	xxxxx
29-30	xxxxx
31-32	xxxxx
33-34	xxxxx
35-36	xxxxx

xxxxx	1-2
xxxxx	3-4
xxxxx	5-6
xxxxx	7-8
xxxxx	9-10
xxxxx	11-12
xxxxx	13-14
xxxxx	15-16
xxxxx	17-18
xxxxx	19-20
xxxxx	21-22
xxxxx	23-24
xxxxx	25-26
xxxxx	27-28
xxxxx	29-30
xxxxx	31-32
xxxxx	33-34
xxxxx	35-36
xxxxx	37-38
xxxxx	39-40
xxxxx	41-42
xxxxx	43-44
xxxxx	45-46
xxxxx	47-48

65-WEST ON Q (L2 FUT)	1-2
65-WEST ON Q (L2 FUT)	3-4
xxxxx	5-6
xxxxx	7-8
xxxxx	9-10
xxxxx	11-12
xxxxx	13-14
xxxxx	15-16
xxxxx	17-18
xxxxx	19-20
xxxxx	21-22
xxxxx	23-24
63-71 (L2 FUT)	25-26
63-71 (L2 FUT)	27-28
63-W.CENTER(L2 FUT)	29-30
63-78 (L2 FUT)	31-32
63-78 (L2 FUT)	33-34
63-78 (L3 FUT)	35-36
63-78 (L3)	37-38
63-71 (L3 FUT)	39-40
63-71 (L3)	41-42
65-78 (CITY)	43-44
63-78 (CITY)	45-46
63-71 (CITY)	47-48

FS63

63-65 (L2 FUT)	1-2
63-65 (L2 FUT)	3-4
65-WEST ON Q (L2 FUT)	5-6
65-WEST ON Q (L2 FUT)	7-8
xxxxx	9-10
xxxxx	11-12
63-65 (L2/L3 FUT)	13-14
63-65 (L3 FUT)	15-16
63-65 (L3)	17-18
65-78 (CITY)	19-20
63-65 (CITY)	21-22
63-65 (CITY)	23-24
	25-26
	27-28
	29-30
	31-32
	33-34
	35-36
	37-38
	39-40
	41-42
	43-44
	45-46
	47-48

OMAHA LAYER III
SPLICE DIAGRAMS

GENERAL INFORMATION

PROFESSIONAL CIVIL ENGINEER
BRYAN D. GUY
E-13003
6/21/16
STATE OF NEBRASKA

FILENAME: X:_C3D 2015 PROJECTS\OPW XXXXX Conduit at Various Fire Stations\CAD\Base Drawings\2.5.2016_OPW_FIBER_SPLICING_DIAGRAMS.dwg
DATE PLOTTED: 6/21/2016 11:10 AM DRAWN BY: TLJ PLOT SCALE: 50:1

PROJECT NO.	SHEET NO.
MAPA-5023(17)	2-N12
C.N. 22608	

SVU_168&Q

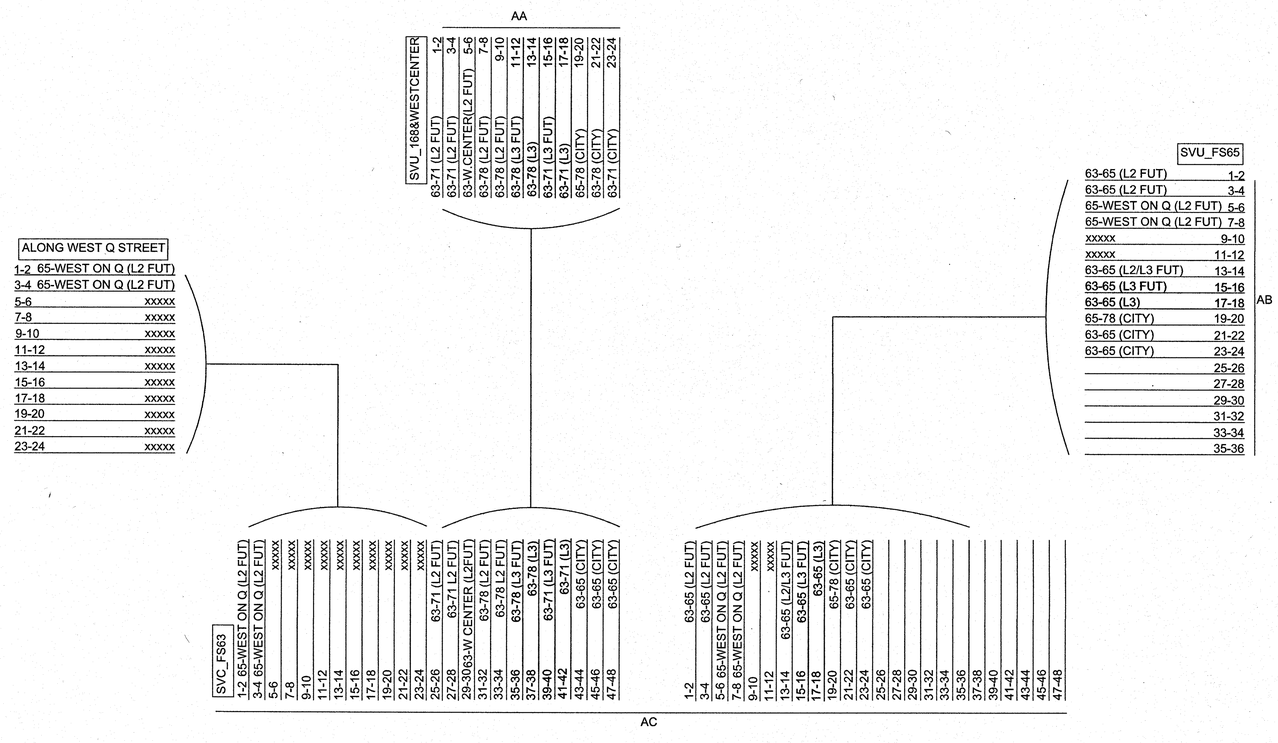

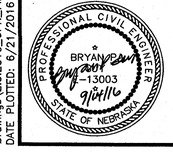

FILENAME: X:_C3D 2015 PROJECTS\OPW XXXXX Conduit at Various Fire Stations\CAD\Base Drawings\2.5.2016_UPN_FIBER_SPLICING_DIAGRAMS.dwg
DATE PLOTTED: 6/21/2016 11:10 AM DRAWN BY: TLJ PLOT SCALE: 50:1

OMAHA LAYER III
SPLICE DIAGRAMS

GENERAL INFORMATION

PROJECT NO.	SHEET NO.
MAPA-5023(17)	2-N13
C.N. 22608	

SVU_FS65

FOR INFORMATION ONLY
FUTURE FIBER SPLICE

SVU_96&F

"MAINT"

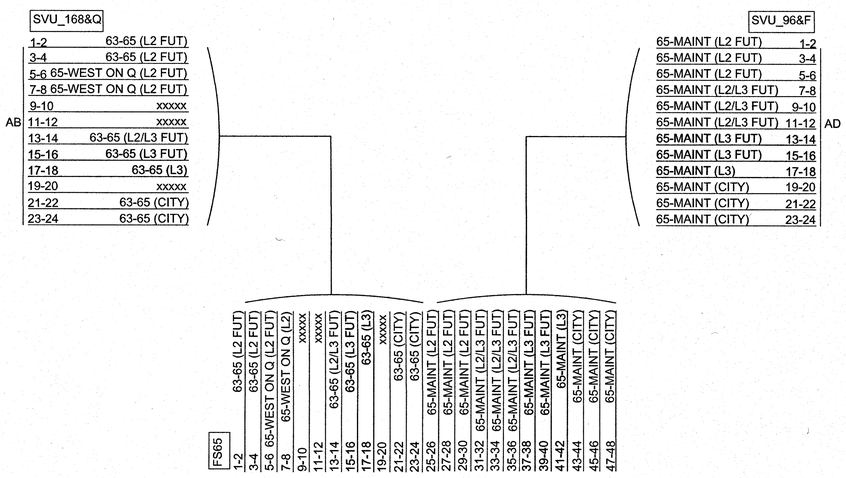

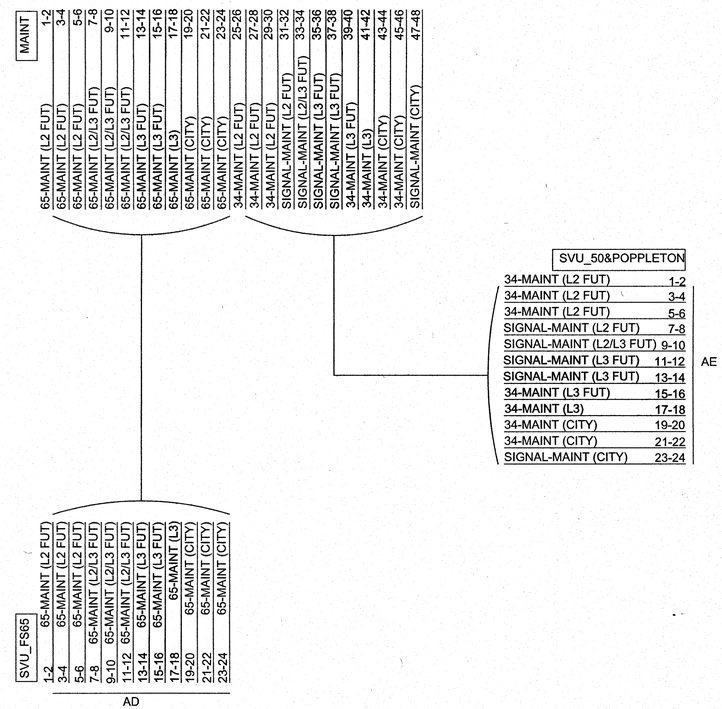

PROFESSIONAL CIVIL ENGINEER
BRIAN GUY
E-13003
7/14/16
STATE OF NEBRASKA

OMAHA LAYER III
SPLICE DIAGRAMS
GENERAL INFORMATION

FILENAME: X:_C3D 2015 PROJECTS\OPW XXXXX Conduit at Various Fire Stations\CAD\Base Drawings\2.5.2016_UPN_FIBER_SPLICING_DIAGRAMS.dwg
DATE PLOTTED: 6/21/2016 11:11 AM DRAWN BY: TLJ PLOT SCALE: 50:1

PROJECT NO.	SHEET NO.
MAPA-5023(17)	3
C.N. 22608	

FIRE STATION #3 3126 S. 16TH ST

EXISTING UPN AERIAL FIBER

EXISTING UPN PULL BOX
40' 1-FURNISH AND INSTALL SINGLE MODE FIBER OPTIC CABLE - 48 STRAND
UPN-CITY FIBER OPTIC CABLE SPLICE

EXISTING UPN CONDUIT

1-FURNISH AND INSTALL SINGLE MODE FIBER OPTIC CABLE - 48 STRAND INSIDE CITY FACILITY SEE SHEET 13 FOR ADDITIONAL DETAILS

50' (2" EXISTING) 1-FURNISH AND INSTALL SINGLE MODE FIBER OPTIC CABLE - 48 STRAND

EXISTING SPLICE BOX

340' (2" EXISTING) 1-FURNISH AND INSTALL SINGLE MODE FIBER OPTIC CABLE - 48 STRAND

EXISTING PULL BOX 20' 1-FURNISH AND INSTALL SINGLE MODE FIBER OPTIC CABLE - 48 STRAND (SPOOLED IN BOX)

EXISTING PULL BOX 20' 1-FURNISH AND INSTALL SINGLE MODE FIBER OPTIC CABLE - 48 STRAND (SPOOLED IN BOX)

132' (2" EXISTING) 1-FURNISH AND INSTALL SINGLE MODE FIBER OPTIC CABLE - 48 STRAND

INTERCONNECT NOTES
1. CONTRACTOR SHALL INSTALL FIBER OPTIC CABLE AND PROVIDE TERMINATIONS AS SHOWN IN THE PLANS.
2. CONTRACTOR SHALL COORDINATE WITH UPN AT LOCATIONS THAT REQUIRE FIBER OPTIC SPLICING.
3. CONTRACTOR SHALL COORDINATE WITH OMAHA FACILITY MAINTENANCE FOR ACCESS TO HUB LOCATIONS.
4. CONTRACTOR SHALL COORDINATE WITH CITY STAFF AND DOTCOMM FOR DOCUMENTATION OF SYSTEM PERFORMANCE

SHEET QUANTITIES			
QNTY	UNIT	ITEM	REMARKS
602	LF	FURNISH AND INSTALL SINGLE MODE FIBER OPTIC CABLE - 48 STRAND	

PROFESSIONAL CIVIL ENGINEER BRYAN GUY E-13003 STATE OF NEBRASKA

20 10 0 20
GRAPHIC SCALE : FEET

INTERCONNECT

FILENAME: X:_C3D 2015 PROJECTS\OPW XXXXX Conduit at Various Fire Stations\CAD\Base Drawings\OPW XXXXX Fiber Install Plans.dwg
DATE PLOTTED: 6/21/2016 10:55 AM DRAWN BY: TLJ PLOT SCALE: 50:1

PROJECT NO.	SHEET NO.
MAPA-5023(17)	4
C.N. 22608	

FIRE STATION #21 3454 AMES AVE.

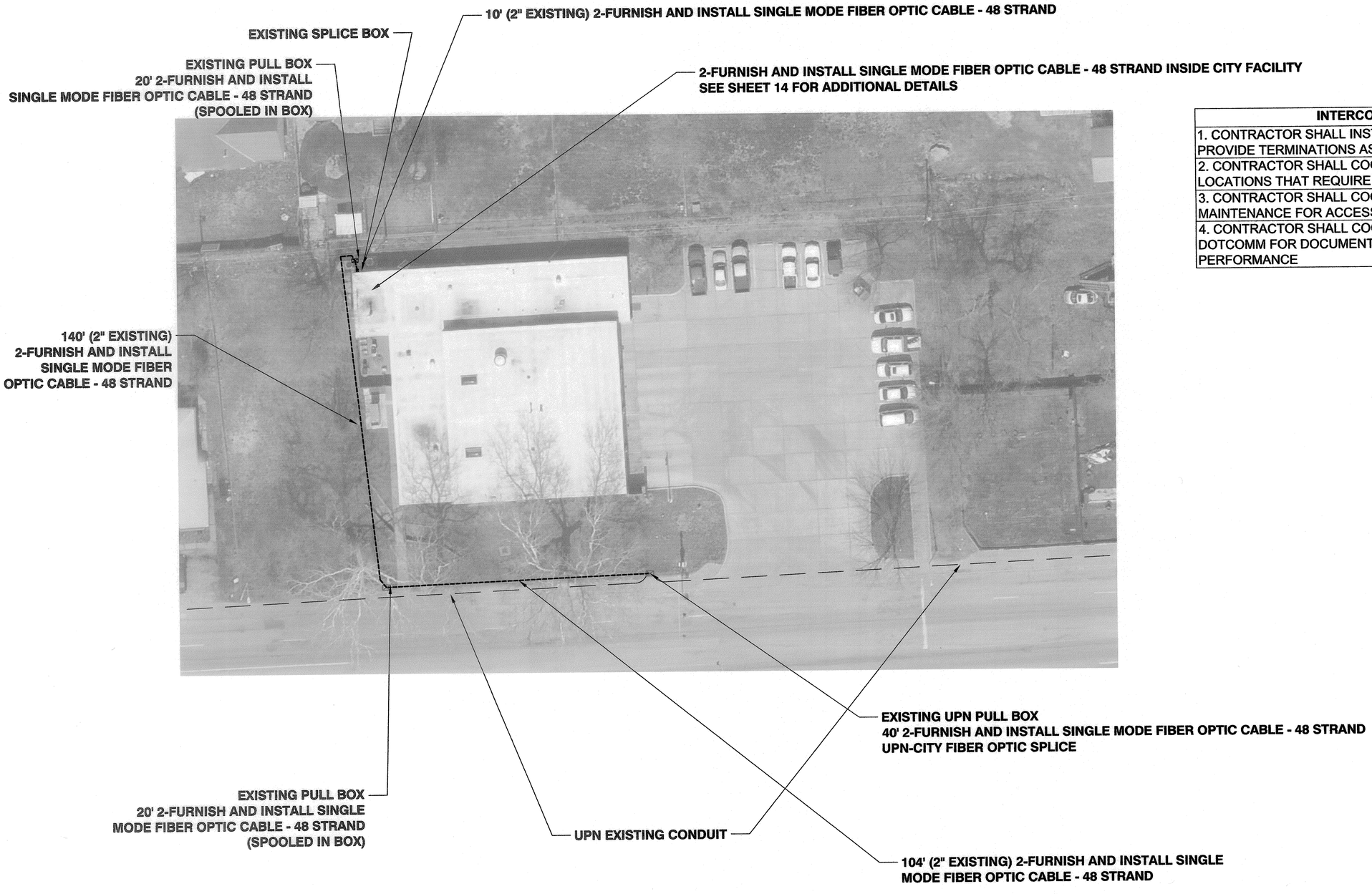

INTERCONNECT NOTES
1. CONTRACTOR SHALL INSTALL FIBER OPTIC CABLE AND PROVIDE TERMINATIONS AS SHOWN IN THE PLANS.
2. CONTRACTOR SHALL COORDINATE WITH UPN AT LOCATIONS THAT REQUIRE FIBER OPTIC SPLICING.
3. CONTRACTOR SHALL COORDINATE WITH OMAHA FACILITY MAINTENANCE FOR ACCESS TO HUB LOCATIONS.
4. CONTRACTOR SHALL COORDINATE WITH CITY STAFF AND DOTCOMM FOR DOCUMENTATION OF SYSTEM PERFORMANCE

SHEET QUANTITIES			
QNTY	UNIT	ITEM	REMARKS
668	LF	FURNISH AND INSTALL SINGLE MODE FIBER OPTIC CABLE - 48 STRAND	

20 10 0 20
GRAPHIC SCALE : FEET

PROFESSIONAL CIVIL ENGINEER
BRYAN P. GUY
E-13003
STATE OF NEBRASKA

LENAME: X:_C3D 2015 PROJECTS\MAPA-5023(17) Conduit at Various Fire Stations\CAD\Base rawings\OPW XXXXX Fiber Install Plans.dwg
ATE PLOTTED: 9/13/2016 12:44 PM DRAWN BY: TLJ PLOT SCALE: 50:1

INTERCONNECT

FIRE STATION #34 956 S 48TH ST

PROJECT NO.	SHEET NO.
MAPA-5023(17)	5
C.N. 22608	

EXISTING PULL BOX
20' 2-FURNISH AND INSTALL
SINGLE MODE FIBER
OPTIC CABLE - 48 STRAND
(SPOOLED IN BOX)

EXISTING PULL BOX
20' 2-FURNISH AND INSTALL
SINGLE MODE FIBER OPTIC CABLE - 48 STRAND
(SPOOLED IN BOX)

93' (2" EXISTING) 2-FURNISH AND INSTALL
SINGLE MODE FIBER OPTIC CABLE - 48 STRAND

250' (2" EXISTING) 2-FURNISH AND INSTALL SINGLE MODE FIBER OPTIC CABLE - 48 STRAND

EXISTING UPN PULL BOX
40' 2-FURNISH AND INSTALL SINGLE MODE FIBER OPTIC CABLE - 48 STRAND
(SPOOLED IN BOX)
UPN-CITY FIBER OPTIC SPLICE

108' (2" EXISTING)
2-FURNISH AND INSTALL
SINGLE MODE
FIBER OPTIC CABLE - 48 STRAND

FURNISH AND INSTALL
2-FURNISH AND INSTALL
SINGLE MODE FIBER OPTIC
CABLE - 48 STRAND
INSIDE CITY FACILITY
SEE SHEET 15 FOR
ADDITIONAL DETAILS

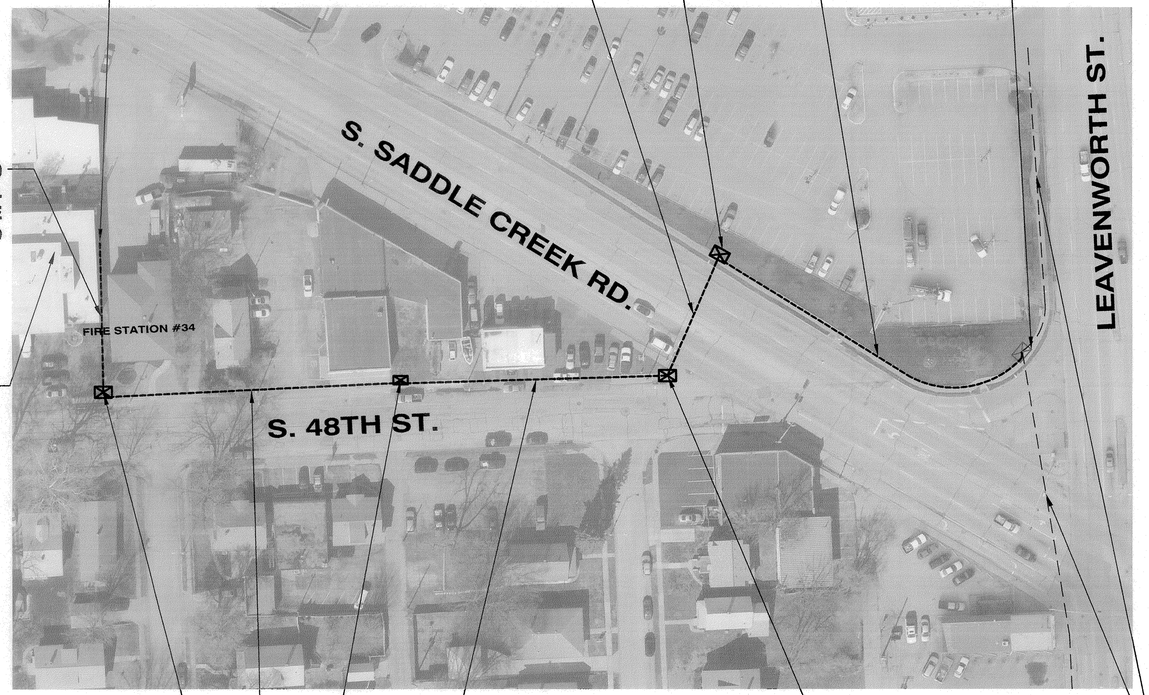

EXISTING PULL BOX
20' 2-FURNISH AND INSTALL
SINGLE MODE FIBER OPTIC CABLE - 48 STRAND
(SPOOLED IN BOX)

211' (2" EXISTING) 2-FURNISH AND INSTALL
SINGLE MODE FIBER OPTIC CABLE - 48 STRAND

189' (2" EXISTING)
2-FURNISH AND INSTALL SINGLE
MODE FIBER OPTIC CABLE - 48 STRAND

EXISTING PULL BOX
20' 2-FURNISH AND INSTALL SINGLE MODE FIBER OPTIC CABLE - 48 STRAND
(SPOOLED IN BOX)

UPN EXISTING 2" CONDUIT

EXISTING PULL BOX
20' 2-FURNISH AND INSTALL SINGLE MODE FIBER OPTIC CABLE - 48 STRAND
(SPOOLED IN BOX)

INTERCONNECT NOTES
1. CONTRACTOR SHALL INSTALL FIBER OPTIC CABLE AND PROVIDE TERMINATIONS AS SHOWN IN THE PLANS.
2. CONTRACTOR SHALL COORDINATE WITH UPN AT LOCATIONS THAT REQUIRE FIBER OPTIC SPLICING.
3. CONTRACTOR SHALL COORDINATE WITH OMAHA FACILITY MAINTENANCE FOR ACCESS TO HUB LOCATIONS.
4. CONTRACTOR SHALL COORDINATE WITH CITY STAFF AND DOTCOMM FOR DOCUMENTATION OF SYSTEM PERFORMANCE

PROFESSIONAL CIVIL ENGINEER
BRYAN M. GUY
E-13003
STATE OF NEBRASKA

SHEET QUANTITIES			
QNTY	UNIT	ITEM	REMARKS
1982	LF	FURNISH AND INSTALL SINGLE MODE FIBER OPTIC CABLE - 48 STRAND	

50 25 0 50
GRAPHIC SCALE : FEET

INTERCONNECT

FILENAME: X:_C3D 2015 PROJECTS\MAPA-5023(17) Conduit at Various Fire Stations\CAD\Base Drawings\OPW XXXXX Fiber Install Plans.dwg
DATE PLOTTED: 9/13/2016 12:46 PM DRAWN BY: TLJ PLOT SCALE: 50:1

PROJECT NO.	SHEET NO.
MAPA-5023(17)	6
C.N. 22608	

FIRE STATION #43 5505 N 103RD ST

UPN EXISTING CONDUIT

220' (2" EXISTING)
2-FURNISH AND
INSTALL SINGLE MODE FIBER
OPTIC CABLE - 48 STRAND

EXISTING PULL BOX
20' 2-FURNISH AND INSTALL
SINGLE MODE FIBER
OPTIC CABLE - 48 STRAND
(SPOOLED IN BOX)

145' (2" EXISTING)
2-FURNISH AND INSTALL
SINGLE MODE
FIBER OPTIC CABLE - 48 STRAND

EXISTING PULL BOX
20' 2-FURNISH AND INSTALL
SINGLE MODE
FIBER OPTIC CABLE - 48 STRAND
(SPOOLED IN BOX)

10' (2" EXISTING)
2-FURNISH AND INSTALL SINGLE MODE FIBER OPTIC CABLE - 48 STRAND

INTERCONNECT NOTES
1. CONTRACTOR SHALL INSTALL FIBER OPTIC CABLE AND PROVIDE TERMINATIONS AS SHOWN IN THE PLANS.
2. CONTRACTOR SHALL COORDINATE WITH UPN AT LOCATIONS THAT REQUIRE FIBER OPTIC SPLICING.
3. CONTRACTOR SHALL COORDINATE WITH OMAHA FACILITY MAINTENANCE FOR ACCESS TO HUB LOCATIONS.
4. CONTRACTOR SHALL COORDINATE WITH CITY STAFF AND DOTCOMM FOR DOCUMENTATION OF SYSTEM PERFORMANCE

FURNISH AND INSTALL
2-FURNISH AND INSTALL SINGLE MODE FIBER OPTIC CABLE - 48 STRAND
INSIDE CITY FACILITY
SEE SHEET 16 FOR
ADDITIONAL DETAILS

44' (2" EXISTING)
2-FURNISH AND INSTALL
SINGLE MODE FIBER OPTIC
CABLE - 48 STRAND

EXISTING SPLICE BOX

EXISTING UPN PULL BOX
40' 2-FURNISH AND INSTALL
SINGLE MODE FIBER OPTIC CABLE - 48 STRAND
UPN-CITY FIBER OPTIC CABLE SPLICE

EXISTING PULL BOX
20' 2-FURNISH AND INSTALL SINGLE MODE FIBER OPTIC CABLE - 48 STRAND
(SPOOLED IN BOX)

SHEET QUANTITIES			
QNTY	UNIT	ITEM	REMARKS
1038	LF	FURNISH AND INSTALL SINGLE MODE FIBER OPTIC CABLE - 48 STRAND	

PROFESSIONAL CIVIL ENGINEER
BRYAN GUY
E-13003
9/14/16
STATE OF NEBRASKA

20 10 0 20
GRAPHIC SCALE : FEET

INTERCONNECT

FILENAME: X:_C3D 2015 PROJECTS\OPW XXXXX Conduit at Various Fire Stations\CAD\Base Drawings\OPW XXXX Fiber Install Plans.dwg
DATE PLOTTED: 6/21/2016 10:57 AM DRAWN BY: TLJ PLOT SCALE: 50:1

PROJECT NO.	SHEET NO.
MAPA-5023(17)	7
C.N. 22608	

FIRE STATION #52 10727 PACIFIC ST

EXISTING PULL BOX
20' 1-FURNISH AND INSTALL SINGLE MODE FIBER OPTIC CABLE - 48 STRAND
(SPOOLED IN BOX)
1 EA FIBER OPTIC CABLE SPLICE
(TO FUTURE FIBER OPTIC CABLE)

EXISTING PULL BOX
20' 1-FURNISH AND INSTALL SINGLE MODE FIBER OPTIC CABLE - 48 STRAND
(SPOOLED IN BOX)

EXISTING CITY INTERCONNECT CONDUIT
EXISTING 1-6 PR.
2450' 1-FURNISH AND INSTALL SINGLE MODE FIBER OPTIC CABLE - 48 STRAND
(20' SPOOL IN EACH EXISTING PULL BOX)

248' (2" EXISTING)
2-FURNISH AND INSTALL SINGLE MODE FIBER OPTIC CABLE - 48 STRAND

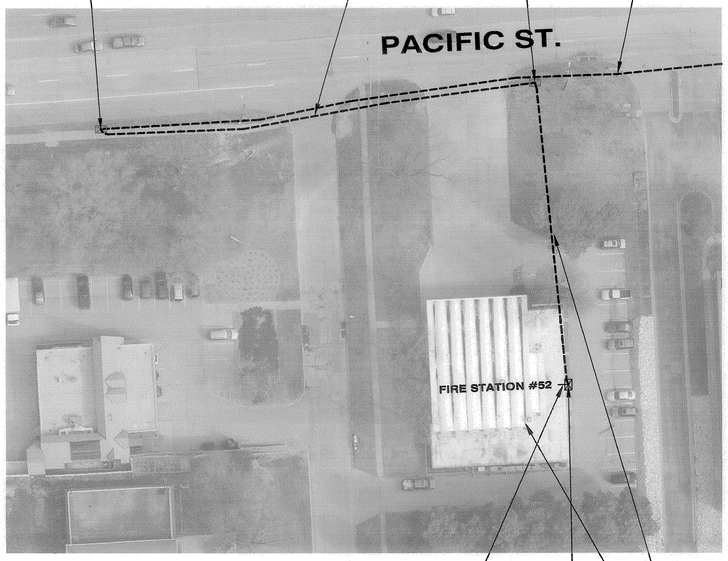

EXISTING PULL BOX
20' 1-FURNISH AND INSTALL SINGLE MODE FIBER OPTIC CABLE - 48 STRAND
(SPOOLED IN BOX)

85' (2" EXISTING)
1-FURNISH AND INSTALL SINGLE MODE FIBER OPTIC CABLE - 48 STRAND

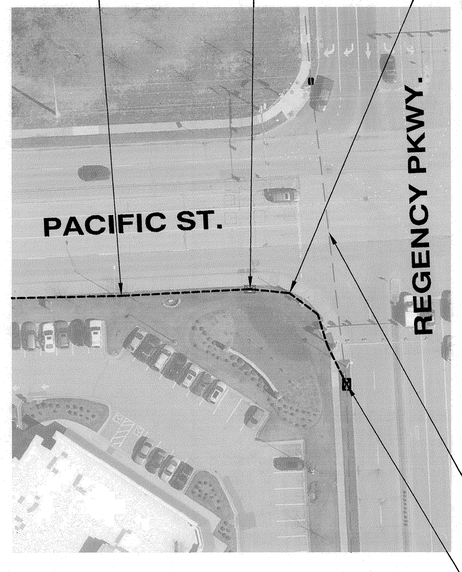

EXISTING UPN CONDUIT

EXISTING UPN PULL BOX
40' 1-FURNISH AND INSTALL SINGLE MODE FIBER OPTIC CABLE - 48 STRAND
UPN-CITY FIBER OPTIC CABLE SPLICE

10' (2" EXISTING)
2-FURNISH AND INSTALL SINGLE MODE FIBER OPTIC CABLE - 48 STRAND

174' (2" EXISTING)
2-FURNISH AND INSTALL SINGLE MODE FIBER OPTIC CABLE - 48 STRAND

EXISTING PULL BOX
20' 2-FURNISH AND INSTALL SINGLE MODE FIBER OPTIC CABLE - 48 STRAND (SPOOLED IN BOX)

FURNISH AND INSTALL
2-FURNISH AND INSTALL SINGLE MODE FIBER OPTIC CABLE - 48 STRAND
INSIDE CITY FACILITY
SEE SHEET 17 FOR ADDITIONAL DETAILS

INTERCONNECT NOTES
1. CONTRACTOR SHALL INSTALL FIBER OPTIC CABLE AND PROVIDE TERMINATIONS AS SHOWN IN THE PLANS.
2. CONTRACTOR SHALL COORDINATE WITH UPN AT LOCATIONS THAT REQUIRE FIBER OPTIC SPLICING.
3. CONTRACTOR SHALL COORDINATE WITH OMAHA FACILITY MAINTENANCE FOR ACCESS TO HUB LOCATIONS.
4. CONTRACTOR SHALL COORDINATE WITH CITY STAFF AND DOTCOMM FOR DOCUMENTATION OF SYSTEM PERFORMANCE

SHEET QUANTITIES

QNTY	UNIT	ITEM	REMARKS
3539	LF	FURNISH AND INSTALL SINGLE MODE FIBER OPTIC CABLE - 48 STRAND	
1	EA	FURNISH AND INSTALL FIBER OPTIC SPLICE	SPLICE TO EXISTING CITY OF OMAHA FIBER OPTIC CABLE

PROFESSIONAL CIVIL ENGINEER
BRYAN R. GUY
E-13003
STATE OF NEBRASKA

50 25 0 50
GRAPHIC SCALE : FEET

INTERCONNECT

FILENAME: X:_C3D 2015 PROJECTS\MAPA-5023(17) Conduit at Various Fire Stations\CAD\Base Drawings\OPW XXXX Fiber Install Plans.dwg
DATE PLOTTED: 8/1/2016 4:36 PM DRAWN BY: TLJ PLOT SCALE: 50:1

PROJECT NO.	SHEET NO.
MAPA-5023(17)	8
C.N. 22608	

FIRE STATION #53 8001 DODGE ST

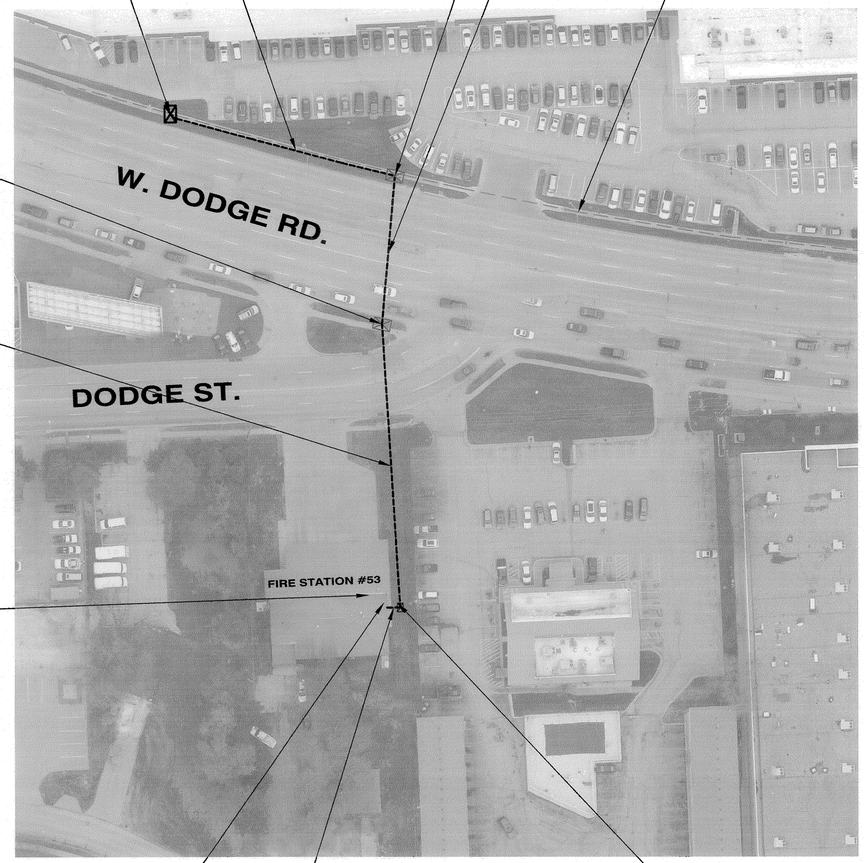

163' (2" EXISTING)
2-FURNISH AND INSTALL SINGLE MODE FIBER OPTIC CABLE - 48 STRAND

EXISTING UPN PULL BOX
40' 2-FURNISH AND INSTALL SINGLE MODE FIBER OPTIC CABLE - 48 STRAND
UPN-CITY FIBER OPTIC CABLE SPLICE

EXISTING PULL BOX
20' 2-FURNISH AND INSTALL SINGLE MODE FIBER OPTIC CABLE - 48 STRAND (SPOOLED IN BOX)

105' (2" EXISTING)
2-FURNISH AND INSTALL SINGLE MODE FIBER OPTIC CABLE - 48 STRAND

EXISTING UPN CONDUIT

EXISTING PULL BOX
20' 2-FURNISH AND INSTALL SINGLE MODE FIBER OPTIC CABLE - 48 STRAND (SPOOLED IN BOX)

195' (2" EXISTING)
2-FURNISH AND INSTALL SINGLE MODE FIBER OPTIC CABLE - 48 STRAND

FURNISH AND INSTALL
2-FURNISH AND INSTALL SINGLE MODE FIBER OPTIC CABLE - 48 STRAND
INSIDE CITY FACILITY
SEE SHEET 18 FOR ADDITIONAL DETAILS

10' (2" EXISTING)
2-FURNISH AND INSTALL SINGLE MODE FIBER OPTIC CABLE - 48 STRAND

EXISTING PULL BOX
20' 2-FURNISH AND INSTALL SINGLE MODE FIBER OPTIC CABLE - 48 STRAND (SPOOLED IN BOX)

EXISTING SPLICE BOX

INTERCONNECT NOTES
1. CONTRACTOR SHALL INSTALL FIBER OPTIC CABLE AND PROVIDE TERMINATIONS AS SHOWN IN THE PLANS.
2. CONTRACTOR SHALL COORDINATE WITH UPN AT LOCATIONS THAT REQUIRE FIBER OPTIC SPLICING.
3. CONTRACTOR SHALL COORDINATE WITH OMAHA FACILITY MAINTENANCE FOR ACCESS TO HUB LOCATIONS.
4. CONTRACTOR SHALL COORDINATE WITH CITY STAFF AND DOTCOMM FOR DOCUMENTATION OF SYSTEM PERFORMANCE

SHEET QUANTITIES			
QNTY	UNIT	ITEM	REMARKS
1146	LF	FURNISH AND INSTALL SINGLE MODE FIBER OPTIC CABLE - 48 STRAND	

PROFESSIONAL CIVIL ENGINEER
BRYAN J. GUY
E-13003
7/7/16
STATE OF NEBRASKA

50 25 0 50
GRAPHIC SCALE : FEET

INTERCONNECT

FILENAME: X:_C3D 2015 PROJECTS\OPW XXXXX Conduit at Various Fire Stations\CAD\Base Drawings\OPW XXXXX Fire Hydrant Plans.dwg
DATE PLOTTED: 6/21/2016 10:57 AM DRAWN BY: TLJ PLOT SCALE: 50:1

PROJECT NO.	SHEET NO.
MAPA-5023(17)	9

C.N. 22608

FIRE STATION #63 16736 S ST

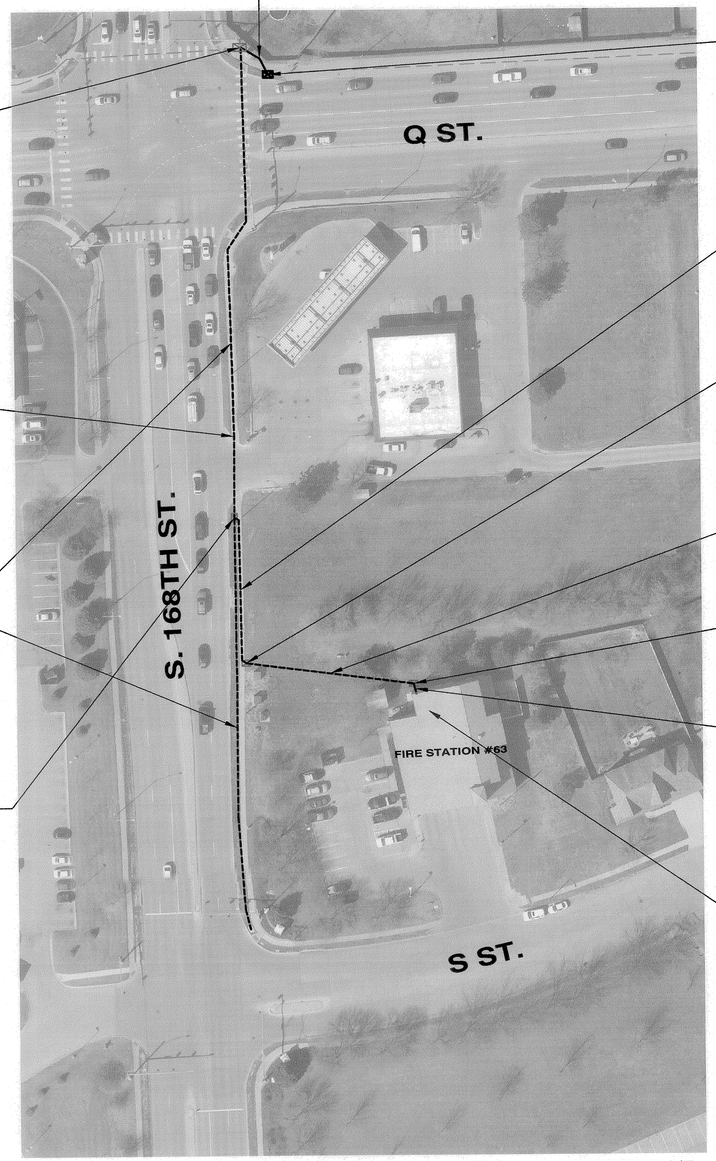

28' (2" EXISTING)
2-FURNISH AND INSTALL SINGLE MODE FIBER OPTIC CABLE - 48 STRAND

EXISTING PULL BOX
20' 3-FURNISH AND INSTALL SINGLE MODE FIBER OPTIC CABLE - 48 STRAND
(SPOOLED IN BOX)
1 EA FIBER OPTIC CABLE SPLICE (TO EXISTING 36 STRAND FIBER OPTIC CABLE)

334' (2" EXISTING)
3-FURNISH AND INSTALL SINGLE MODE FIBER OPTIC CABLE - 48 STRAND

EXISTING CITY CONDUIT

EXISTING PULL BOX
20' 3-FURNISH AND INSTALL SINGLE MODE FIBER OPTIC CABLE - 48 STRAND
(SPOOLED IN BOX)

EXISTING UPN PULL BOX
40' 2-FURNISH AND INSTALL SINGLE MODE FIBER OPTIC CABLE - 48 STRAND
UPN-CITY FIBER OPTIC CABLE SPLICE

106' (2" EXISTING)
3-FURNISH AND INSTALL SINGLE MODE FIBER OPTIC CABLE - 48 STRAND

EXISTING PULL BOX
20' 3-FURNISH AND INSTALL SINGLE MODE FIBER OPTIC CABLE - 48 STRAND
(SPOOLED IN BOX)

118' (2" EXISTING)
3-FURNISH AND INSTALL SINGLE MODE FIBER OPTIC CABLE - 48 STRAND

EXISTING PULL BOX
20' 3-FURNISH AND INSTALL SINGLE MODE FIBER OPTIC CABLE - 48 STRAND
(SPOOLED IN BOX)

10' (2" EXISTING)
3-FURNISH AND INSTALL SINGLE MODE FIBER OPTIC CABLE - 48 STRAND

FURNISH AND INSTALL
2-FURNISH AND INSTALL SINGLE MODE FIBER OPTIC CABLE - 48 STRAND
INSIDE CITY FACILITY
SEE SHEET 19 FOR
ADDITIONAL DETAILS

INTERCONNECT NOTES
1. CONTRACTOR SHALL INSTALL FIBER OPTIC CABLE AND PROVIDE TERMINATIONS AS SHOWN IN THE PLANS.
2. CONTRACTOR SHALL COORDINATE WITH UPN AT LOCATIONS THAT REQUIRE FIBER OPTIC SPLICING.
3. CONTRACTOR SHALL COORDINATE WITH OMAHA FACILITY MAINTENANCE FOR ACCESS TO HUB LOCATIONS.
4. CONTRACTOR SHALL COORDINATE WITH CITY STAFF AND DOTCOMM FOR DOCUMENTATION OF SYSTEM PERFORMANCE

SHEET QUANTITIES			
QNTY	UNIT	ITEM	REMARKS
2080	LF	FURNISH AND INSTALL SINGLE MODE FIBER OPTIC CABLE - 48 STRAND	
1	EA	FURNISH AND INSTALL FIBER OPTIC SPLICE	SPLICE TO EXISTING CITY OF OMAHA FIBER OPTIC CABLE

50 25 0 50
GRAPHIC SCALE : FEET

PROFESSIONAL CIVIL ENGINEER
BRYAN R. COY
E-13003
STATE OF NEBRASKA
9/14/16

ILENAME: X:_C3D 2015 PROJECTS\MAPA-5023(17) Conduit at Various Fire Stations\CAD\Base
Drawings\OPW XXXXX Fiber Install Plans.dwg
ATE PLOTTED: 8/1/2016 4:40 PM DRAWN BY: TLJ PLOT SCALE: 50:1

INTERCONNECT

PROJECT NO.	SHEET NO.
MAPA-5023(17)	10
C.N. 22608	

FIRE STATION #71 20474 LARAMIE RD

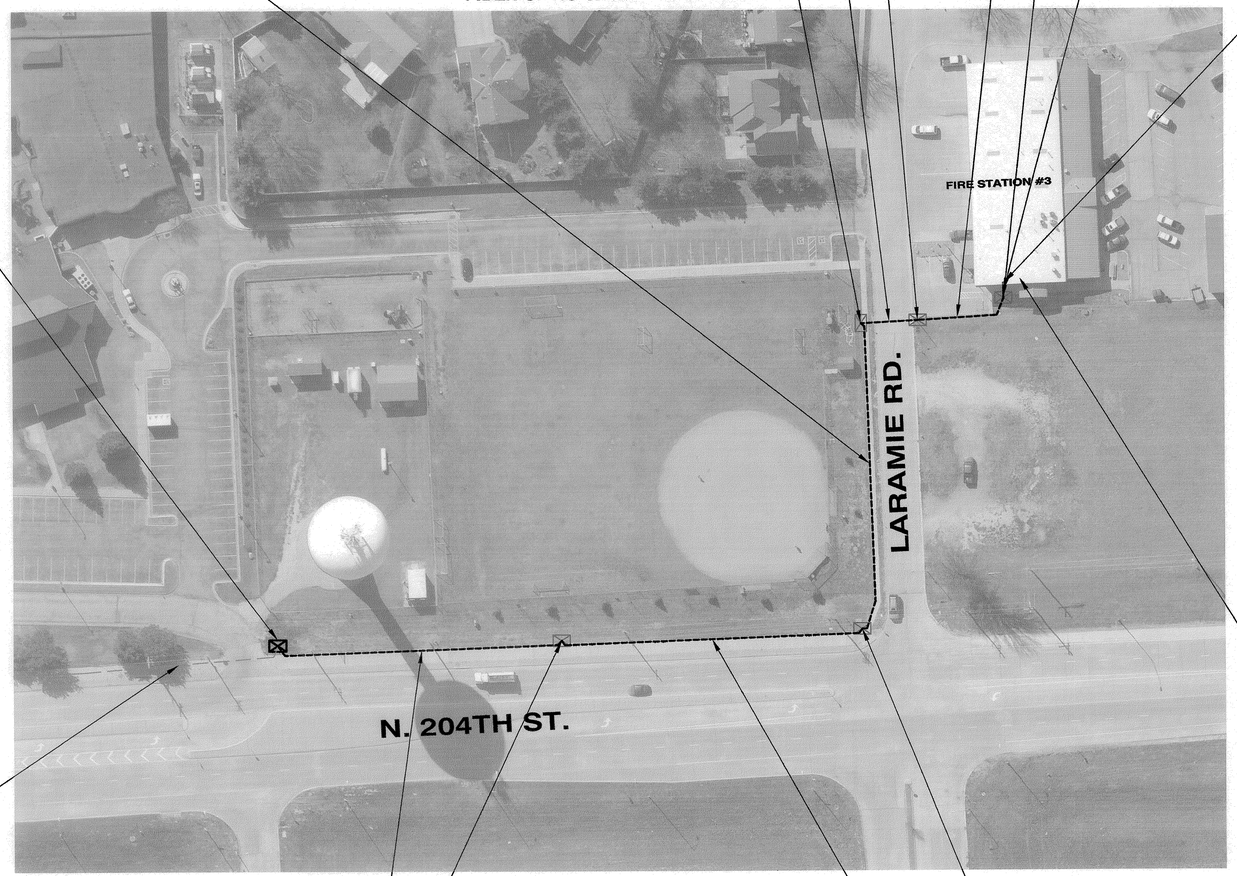

EXISTING PULL BOX
20' 1-FURNISH AND INSTALL SINGLE MODE FIBER OPTIC CABLE - 48 STRAND

41' (2" EXISTING)
1-FURNISH AND INSTALL SINGLE MODE FIBER OPTIC CABLE - 48 STRAND

219' (2" EXISTING)
1-FURNISH AND INSTALL SINGLE MODE FIBER OPTIC CABLE - 48 STRAND

EXISTING PULL BOX
20' 1-FURNISH AND INSTALL SINGLE MODE FIBER OPTIC CABLE - 48 STRAND

69' (2" EXISTING)
1-FURNISH AND INSTALL SINGLE MODE FIBER OPTIC CABLE - 48 STRAND

EXISTING PULL BOX
20' 1-FURNISH AND INSTALL SINGLE MODE FIBER OPTIC CABLE - 48 STRAND

30' (2" EXISTING)
1-FURNISH AND INSTALL SINGLE MODE FIBER OPTIC CABLE - 48 STRAND

EXISTING SPLICE BOX

EXISTING UPN PULL BOX
40' 1-FURNISH AND INSTALL SINGLE MODE FIBER OPTIC CABLE - 48 STRAND
UPN-CITY FIBER OPTIC CABLE SPLICE

FURNISH AND INSTALL
1-FURNISH AND INSTALL SINGLE MODE FIBER OPTIC CABLE - 48 STRAND
INSIDE CITY FACILITY
SEE SHEET 20 FOR
ADDITIONAL DETAILS

EXISTING UPN CONDUIT

205' (2" EXISTING)
1-FURNISH AND INSTALL SINGLE MODE FIBER OPTIC CABLE - 48 STRAND

EXISTING PULL BOX
20' 1-FURNISH AND INSTALL SINGLE MODE FIBER OPTIC CABLE - 48 STRAND

EXISTING PULL BOX
20' 1-FURNISH AND INSTALL SINGLE MODE FIBER OPTIC CABLE - 48 STRAND

215' (2" EXISTING)
1-FURNISH AND INSTALL SINGLE MODE FIBER OPTIC CABLE - 48 STRAND

INTERCONNECT NOTES
1. CONTRACTOR SHALL INSTALL FIBER OPTIC CABLE AND PROVIDE TERMINATIONS AS SHOWN IN THE PLANS.
2. CONTRACTOR SHALL COORDINATE WITH UPN AT LOCATIONS THAT REQUIRE FIBER OPTIC SPLICING.
3. CONTRACTOR SHALL COORDINATE WITH OMAHA FACILITY MAINTENANCE FOR ACCESS TO HUB LOCATIONS.
4. CONTRACTOR SHALL COORDINATE WITH CITY STAFF AND DOTCOMM FOR DOCUMENTATION OF SYSTEM PERFORMANCE

SHEET QUANTITIES			
QNTY	UNIT	ITEM	REMARKS
919	LF	FURNISH AND INSTALL SINGLE MODE FIBER OPTIC CABLE - 48 STRAND	

50 25 0 50
GRAPHIC SCALE : FEET

PROFESSIONAL CIVIL ENGINEER
BRYAN E. TUCY
E-13003
STATE OF NEBRASKA
7/14/16

FILENAME: X:_C3D 2015 PROJECTS\OPW XXXXX Conduit at Various Fire Stations\CAD\Base Drawings\OPW XXXXX Fiber Install Plans.dwg
DATE PLOTTED: 6/21/2016 10:57 AM DRAWN BY: TLJ PLOT SCALE: 50:1

INTERCONNECT

PROJECT NO.	SHEET NO.
MAPA-5023(17)	11
C.N. 22608	

FIRE STATION #78 2909 N 144TH ST

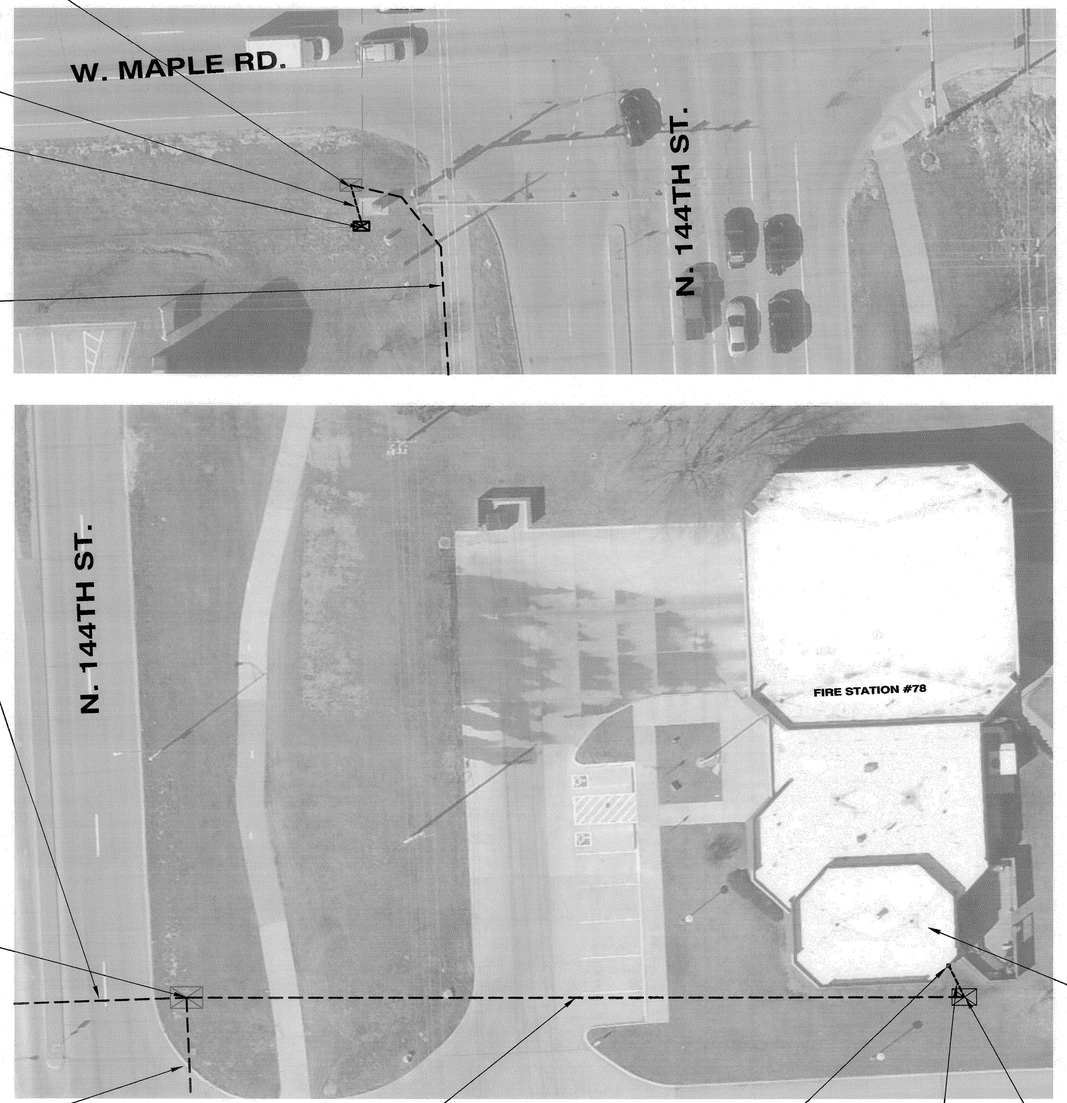

EXISTING PULL BOX
20' 1-FURNISH AND INSTALL SINGLE MODE FIBER OPTIC CABLE - 48 STRAND
(SPOOLED IN BOX)

13' (2" EXISTING)
1-FURNISH AND INSTALL SINGLE MODE FIBER OPTIC CABLE - 48 STRAND

EXISTING UPN PULL BOX
40' 1-FURNISH AND INSTALL SINGLE MODE FIBER OPTIC CABLE - 48 STRAND
CITY-UPN FIBER OPTIC CABLE SPLICE

2850' (2" EXISTING)
1-6 PR. (EXISTING)
1-FURNISH AND INSTALL SINGLE MODE FIBER OPTIC CABLE - 48 STRAND
(20' SPOOL IN EACH EXISTING PULL BOX

EXISTING PULL BOX
20' 1-FURNISH AND INSTALL SINGLE MODE FIBER OPTIC CABLE - 48 STRAND
(SPOOLED IN BOX)
1 EA FIBER OPTIC CABLE SPLICE
(TO EXISTING 36 STRAND FIBER OPTIC CABLE)

EXISTING CITY CONDUIT

216' (2" EXISTING)
2-FURNISH AND INSTALL SINGLE MODE FIBER OPTIC CABLE - 48 STRAND

EXISTING SPLICE BOX

10' (2" EXISTING)
2-FURNISH AND INSTALL SINGLE MODE FIBER OPTIC CABLE - 48 STRAND

FURNISH AND INSTALL
2-FURNISH AND INSTALL SINGLE MODE FIBER OPTIC CABLE - 48 STRAND
INSIDE CITY FACILITY
SEE SHEET 21 FOR ADDITIONAL DETAILS

EXISTING PULL BOX
20' 2-FURNISH AND INSTALL SINGLE MODE FIBER OPTIC CABLE - 48 STRAND
(SPOOLED IN BOX)

INTERCONNECT NOTES
1. CONTRACTOR SHALL INSTALL FIBER OPTIC CABLE AND PROVIDE TERMINATIONS AS SHOWN IN THE PLANS.
2. CONTRACTOR SHALL COORDINATE WITH UPN AT LOCATIONS THAT REQUIRE FIBER OPTIC SPLICING.
3. CONTRACTOR SHALL COORDINATE WITH OMAHA FACILITY MAINTENANCE FOR ACCESS TO HUB LOCATIONS.
4. CONTRACTOR SHALL COORDINATE WITH CITY STAFF AND DOTCOMM FOR DOCUMENTATION OF SYSTEM PERFORMANCE

SHEET QUANTITIES

QNTY	UNIT	ITEM	REMARKS
3435	LF	FURNISH AND INSTALL SINGLE MODE FIBER OPTIC CABLE - 48 STRAND	
1	EA	FURNISH AND INSTALL FIBER OPTIC SPLICE	SPLICE TO EXISTING CITY OF OMAHA FIBER OPTIC CABLE

PROFESSIONAL CIVIL ENGINEER
BRYAN P. GUY
E-13003
STATE OF NEBRASKA
9/14/16

20 10 0 20
GRAPHIC SCALE : FEET

INTERCONNECT

FILENAME: X:_C3D 2015 PROJECTS\MAPA-5023(17) Conduit at Various Fire Stations\CAD\Base Drawings\OPW XXXXX Fiber Install Plans.dwg
DATE PLOTTED: 8/1/2016 4:04 PM DRAWN BY: TLJ PLOT SCALE: 50:1

SOUTHWEST MAINTENANCE FACILITY 4040 S 96TH ST

PROJECT NO.	SHEET NO.
MAPA-5023(17)	12
C.N. 22608	

298' (2" EXISTING)
1-FURNISH AND INSTALL SINGLE MODE FIBER OPTIC CABLE - 48 STRAND

EXISTING PULL BOX
20' 1-FURNISH AND INSTALL SINGLE MODE FIBER OPTIC CABLE - 48 STRAND (SPOOLED IN BOX)

10' (2" EXISTING)
1-FURNISH AND INSTALL SINGLE MODE FIBER OPTIC CABLE - 48 STRAND

EXISTING SPLICE BOX

FURNISH AND INSTALL
1-FURNISH AND INSTALL SINGLE MODE FIBER OPTIC CABLE - 48 STRAND
INSIDE CITY FACILITY
SEE SHEET 20 FOR ADDITIONAL DETAILS

280' (2" EXISTING)
1-FURNISH AND INSTALL SINGLE MODE FIBER OPTIC CABLE - 48 STRAND

EXISTING PULL BOX
20' 1-FURNISH AND INSTALL SINGLE MODE FIBER OPTIC CABLE - 48 STRAND (SPOOLED IN BOX)

115' (2" EXISTING)
1-FURNISH AND INSTALL SINGLE MODE FIBER OPTIC CABLE - 48 STRAND

EXISTING PULL BOX
20' 1-FURNISH AND INSTALL SINGLE MODE FIBER OPTIC CABLE - 48 STRAND

EXISTING PULL BOX
20' 1-FURNISH AND INSTALL SINGLE MODE FIBER OPTIC CABLE - 48 STRAND (SPOOLED IN BOX)

86' (2" EXISTING)
1-FURNISH AND INSTALL SINGLE MODE FIBER OPTIC CABLE - 48 STRAND

EXISTING UPN PULL BOX
40' 1-FURNISH AND INSTALL SINGLE MODE FIBER OPTIC CABLE - 48 STRAND
UPN-CITY FIBER OPTIC CABLE SPLICE

EXISTING UPN CONDUIT

121' (2" EXISTING)
1-FURNISH AND INSTALL SINGLE MODE FIBER OPTIC CABLE - 48 STRAND

INTERCONNECT NOTES
1. CONTRACTOR SHALL INSTALL FIBER OPTIC CABLE AND PROVIDE TERMINATIONS AS SHOWN IN THE PLANS.
2. CONTRACTOR SHALL COORDINATE WITH UPN AT LOCATIONS THAT REQUIRE FIBER OPTIC SPLICING.
3. CONTRACTOR SHALL COORDINATE WITH OMAHA FACILITY MAINTENANCE FOR ACCESS TO HUB LOCATIONS.
4. CONTRACTOR SHALL COORDINATE WITH CITY STAFF AND DOTCOMM FOR DOCUMENTATION OF SYSTEM PERFORMANCE

PROFESSIONAL CIVIL ENGINEER
BRYAN
E-13003
7/8/16
STATE OF NEBRASKA

SHEET QUANTITIES			
QNTY	UNIT	ITEM	REMARKS
1050	LF	FURNISH AND INSTALL SINGLE MODE FIBER OPTIC CABLE - 48 STRAND	

50 25 0 50
GRAPHIC SCALE : FEET

INTERCONNECT

FILENAME: X:_C3D 2015 PROJECTS\OPW XXXXX Conduit at Various Fire Stations\CAD\Base Drawings\OPW XXXXX Fiber Install Plans.dwg
DATE PLOTTED: 6/21/2016 10:58 AM DRAWN BY: TLJ PLOT SCALE: 50:1

PROJECT NO.	SHEET NO.
MAPA-5023(17)	13
C.N. 22608	

FIRE STATION #3 3126 S. 16TH ST

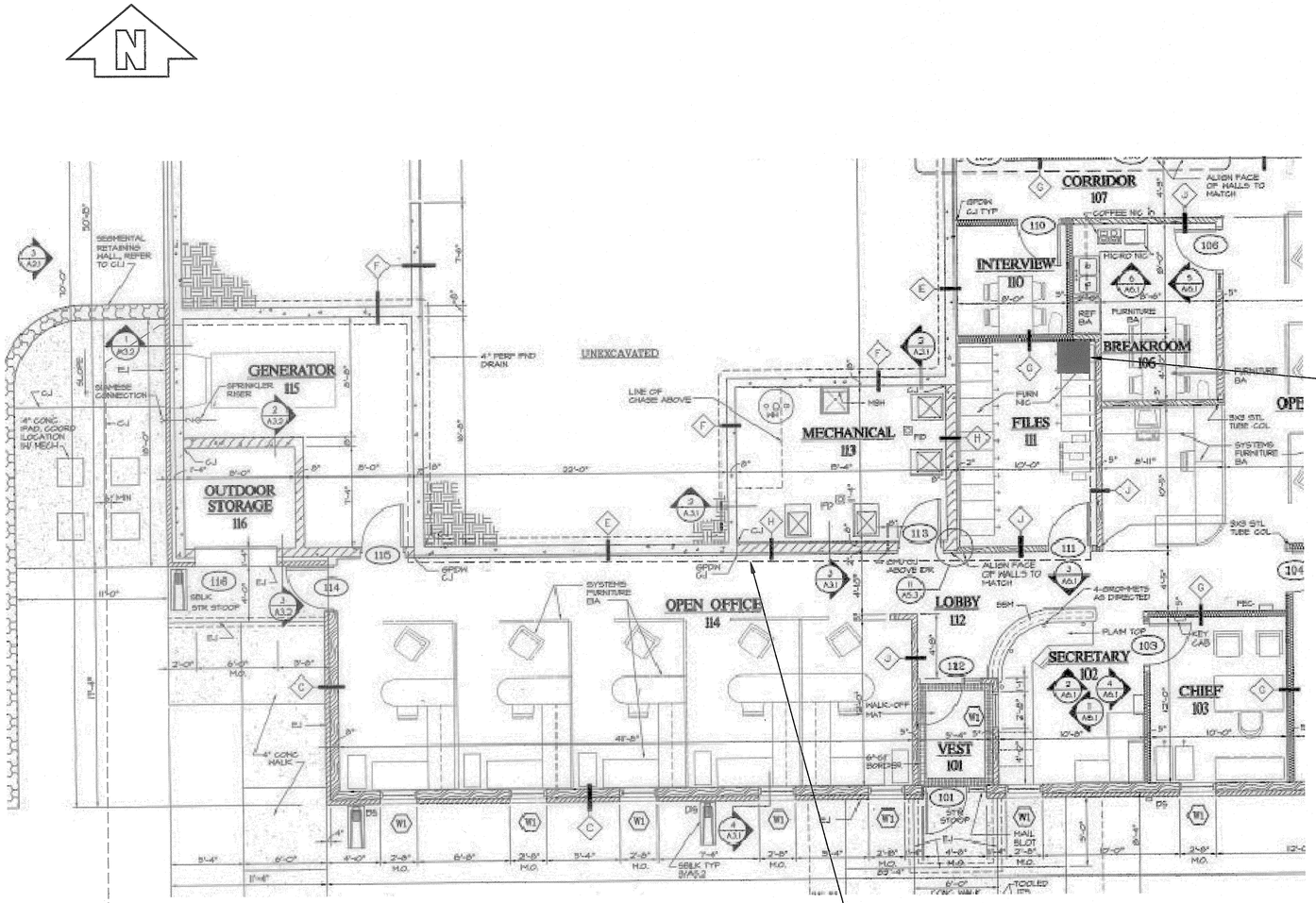

INTERCONNECT NOTES
1. CONTRACTOR TO INSTALL WALL MOUNTED ENCLOSURE AS INDICATED ON THE PLANS. ANY MODIFICATIONS SHALL BE APPROVED BY THE ENGINEER.
2. CONTRACTOR SHALL INSTALL ALL NECESSARY FIBER OPTIC DISTRIBUTION UNITS, PATCH CABLES, AND OTHER ACCESSORIES AND MATERIALS TO MAKE THE SYSTEM OPERATIONAL.
3. CONTRACTOR SHALL COORDINATE, CHECK, AND TEST THE SYSTEM OPERATION ON THE EMERGENCY POWER SUPPLY. WHERE THE EMERGENCY POWER SUPPLY IS NOT INCLUDED, THE CONTRACTOR SHALL INSTALL BATTERY BACK-UP SYSTEM AS SHOWN IN THE PLANS.
4. CONTRACTOR SHALL SPLICE AND TEST ALL FIBER OPTIC CABLES AS SHOWN IN THE PLANS AND DESCRIBED IN THE SPECIAL PROVISIONS.

1 EA FURNISH AND INSTALL ENCLOSED WALL MOUNTED CABINET - 24U
1 EA FURNISH AND INSTALL RACK MOUNTED FIBER DISTRIBUTION UNIT (FDU) - 96 FIBER
1 EA FURNISH AND INSTALL POWER DISTRIBUTION UNIT (PDU)
48 EA FURNISH AND INSTALL TERMINATED FIBER CONNECTOR (SC TYPE)

50' (2" EXISTING)
2-FURNISH AND INSTALL SINGLE MODE FIBER OPTIC CABLE - 48 STRAND

SHEET QUANTITIES			
QNTY	UNIT	ITEM	REMARKS
100	LF	FURNISH AND INSTALL SINGLE MODE FIBER OPTIC CABLE - 48 STRAND	
1	EA	FURNISH AND INSTALL ENCLOSED WALL MOUNTED CABINET - 24U	
1	EA	FURNISH AND INSTALL RACK MOUNTED FIBER DISTRIBUTION UNIT (FDU) - 96 FIBER	
1	EA	FURNISH AND INSTALL POWER DISTRIBUTION UNIT (PDU)	
48	EA	FURNISH AND INSTALL TERMINATED FIBER CONNECTOR (SC TYPE)	

PROFESSIONAL CIVIL ENGINEER
BRYAN P. GUY
E-13003
STATE OF NEBRASKA

NOT TO SCALE

INTERNAL FIBER PLAN

FILENAME: X:_C3D 2015 PROJECTS\MAPA-5023(17) Conduit at Various Fire Stations\CAD\Base Drawings\OPW XXXXX Fiber Install Plans.dwg
DATE PLOTTED: 7/29/2016 3:58 PM DRAWN BY: TLJ PLOT SCALE: 50:1

PROJECT NO.	SHEET NO.
MAPA-5023(17)	14
C.N. 22608	

FIRE STATION #21 3454 AMES AVE.

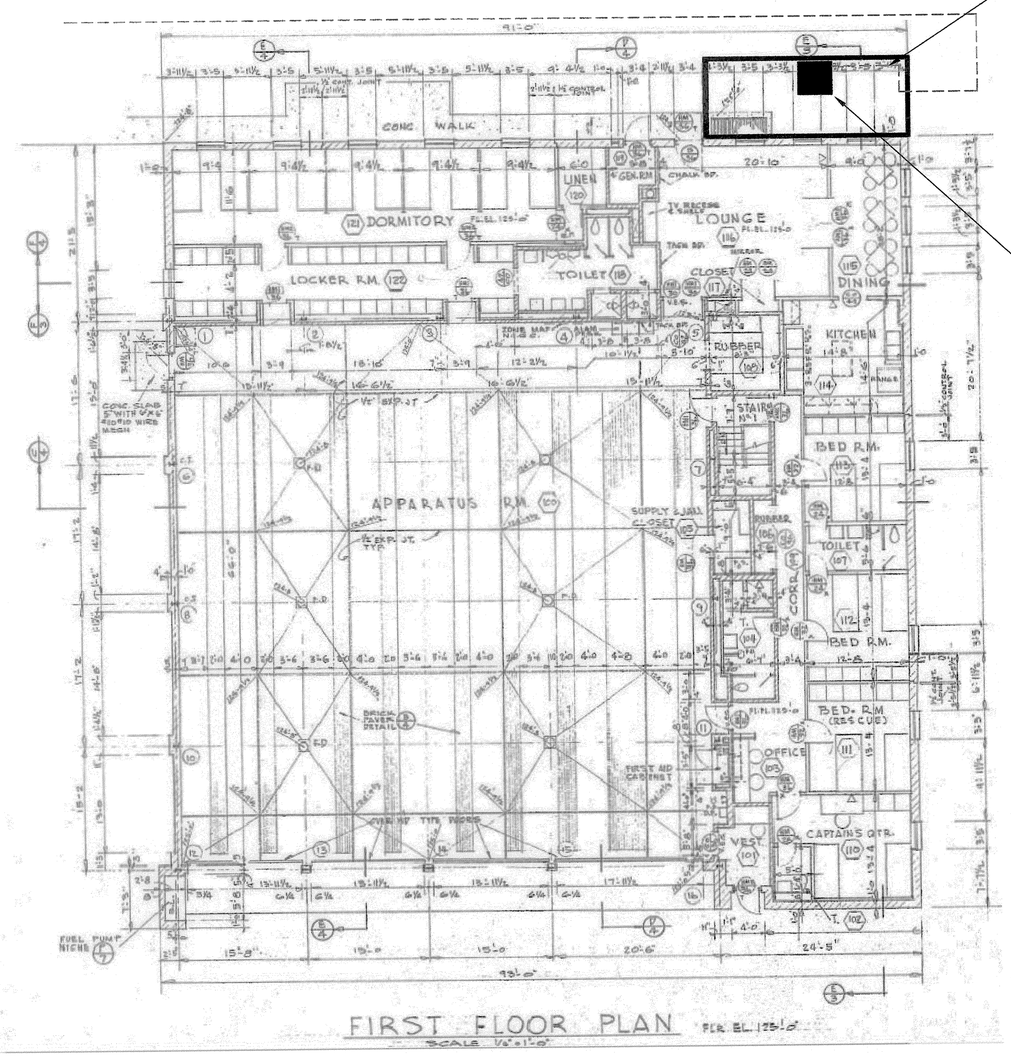

50' (2" EXISTING)
2-FURNISH AND INSTALL SINGLE MODE FIBER OPTIC CABLE - 48 STRAND

INTERCONNECT NOTES
1. CONTRACTOR TO INSTALL WALL MOUNTED ENCLOSURE AS INDICATED ON THE PLANS. ANY MODIFICATIONS SHALL BE APPROVED BY THE ENGINEER.
2. CONTRACTOR SHALL INSTALL ALL NECESSARY FIBER OPTIC DISTRIBUTION UNITS, PATCH CABLES, AND OTHER ACCESSORIES AND MATERIALS TO MAKE THE SYSTEM OPERATIONAL.
3. CONTRACTOR SHALL COORDINATE, CHECK, AND TEST THE SYSTEM OPERATION ON THE EMERGENCY POWER SUPPLY. WHERE THE EMERGENCY POWER SUPPLY IS NOT INCLUDED, THE CONTRACTOR SHALL INSTALL BATTERY BACK-UP SYSTEM AS SHOWN IN THE PLANS.
4. CONTRACTOR SHALL SPLICE AND TEST ALL FIBER OPTIC CABLES AS SHOWN IN THE PLANS AND DESCRIBED IN THE SPECIAL PROVISIONS.

1 EA FURNISH AND INSTALL ENCLOSED WALL MOUNTED CABINET - 24U
1 EA FURNISH AND INSTALL RACK MOUNTED FIBER DISTRIBUTION UNIT (FDU) - 96 FIBER
1 EA FURNISH AND INSTALL POWER DISTRIBUTION UNIT (PDU)
48 EA FURNISH AND INSTALL TERMINATED FIBER CONNECTOR (SC TYPE)

SHEET QUANTITIES			
QNTY	UNIT	ITEM	REMARKS
100	LF	FURNISH AND INSTALL SINGLE MODE FIBER OPTIC CABLE - 48 STRAND	
1	EA	FURNISH AND INSTALL ENCLOSED WALL MOUNTED CABINET - 24U	
1	EA	FURNISH AND INSTALL RACK MOUNTED FIBER DISTRIBUTION UNIT (FDU) - 96 FIBER	
1	EA	FURNISH AND INSTALL POWER DISTRIBUTION UNIT (PDU)	
48	EA	FURNISH AND INSTALL TERMINATED FIBER CONNECTOR (SC TYPE)	

PROFESSIONAL CIVIL ENGINEER
BRYAN J. GUY
E-13003
9/7/16
STATE OF NEBRASKA

NOT TO SCALE

INTERNAL FIBER PLAN

LENAME: X:_C3D 2015 PROJECTS\MAPA-5023(17) Conduit at Various Fire Stations\CAD\Base
rawings\OPW XXXXX Fiber Install Plans.dwg
ATE PLOTTED: 7/29/2016 3:59 PM DRAWN BY: TLJ PLOT SCALE: 50:1

PROJECT NO.	SHEET NO.
MAPA-5023(17)	15
C.N. 22608	

FIRE STATION #34 956 S 48TH ST

1 EA FURNISH AND INSTALL ENCLOSED WALL MOUNTED CABINET - 24U
1 EA FURNISH AND INSTALL RACK MOUNTED FIBER DISTRIBUTION UNIT (FDU) - 96 FIBER
1 EA FURNISH AND INSTALL POWER DISTRIBUTION UNIT (PDU)
48 EA FURNISH AND INSTALL TERMINATED FIBER CONNECTOR (SC TYPE)

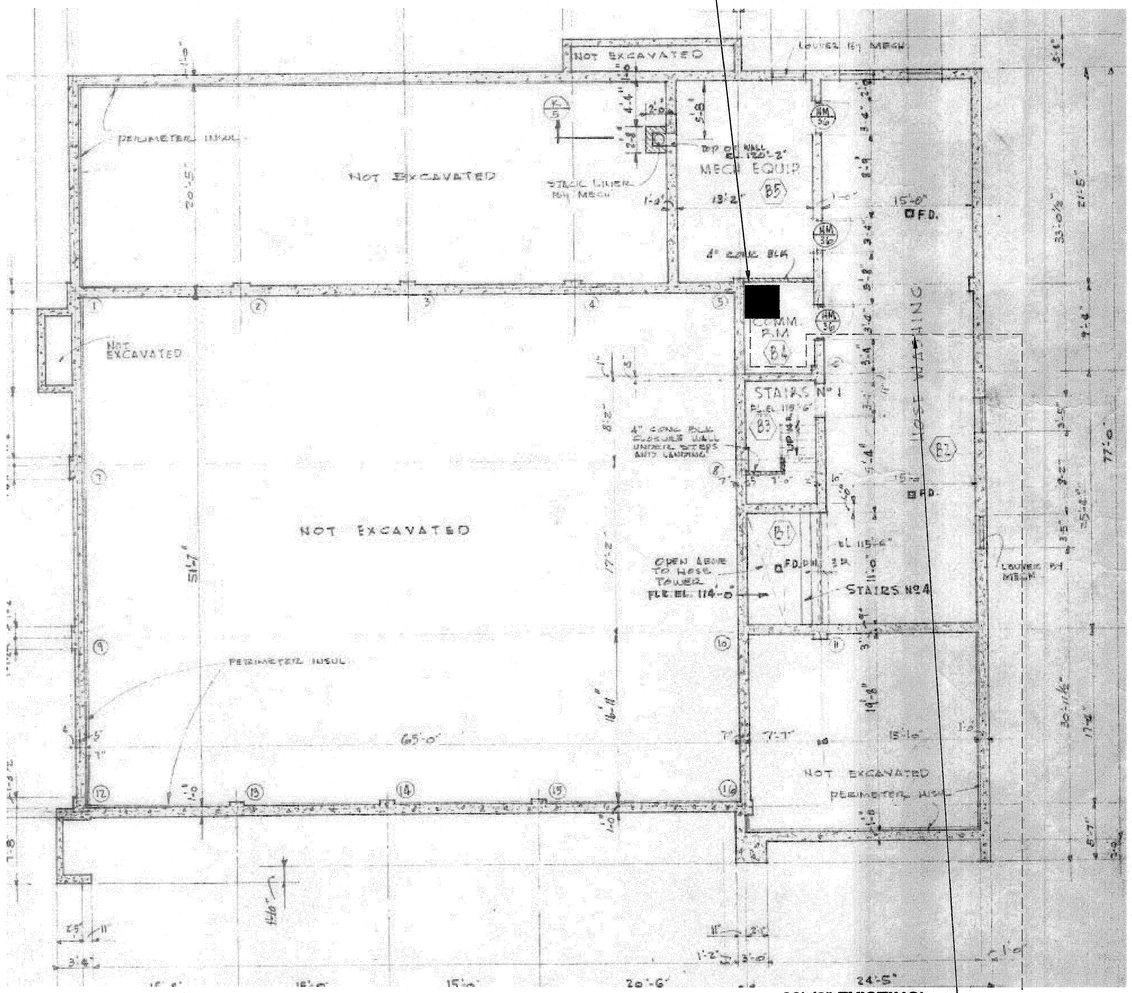

60' (2" EXISTING)
2-FURNISH AND INSTALL SINGLE MODE FIBER OPTIC CABLE - 48 STRAND

INTERCONNECT NOTES
1. CONTRACTOR TO INSTALL WALL MOUNTED ENCLOSURE AS INDICATED ON THE PLANS. ANY MODIFICATIONS SHALL BE APPROVED BY THE ENGINEER.
2. CONTRACTOR SHALL INSTALL ALL NECESSARY FIBER OPTIC DISTRIBUTION UNITS, PATCH CABLES, AND OTHER ACCESSORIES AND MATERIALS TO MAKE THE SYSTEM OPERATIONAL.
3. CONTRACTOR SHALL COORDINATE, CHECK, AND TEST THE SYSTEM OPERATION ON THE EMERGENCY POWER SUPPLY. WHERE THE EMERGENCY POWER SUPPLY IS NOT INCLUDED, THE CONTRACTOR SHALL INSTALL BATTERY BACK-UP SYSTEM AS SHOWN IN THE PLANS.
4. CONTRACTOR SHALL SPLICE AND TEST ALL FIBER OPTIC CABLES AS SHOWN IN THE PLANS AND DESCRIBED IN THE SPECIAL PROVISIONS.

SHEET QUANTITIES

QNTY	UNIT	ITEM	REMARKS
120	LF	FURNISH AND INSTALL SINGLE MODE FIBER OPTIC CABLE - 48 STRAND	
1	EA	FURNISH AND INSTALL ENCLOSED WALL MOUNTED CABINET - 24U	
1	EA	FURNISH AND INSTALL RACK MOUNTED FIBER DISTRIBUTION UNIT (FDU) - 96 FIBER	
1	EA	FURNISH AND INSTALL POWER DISTRIBUTION UNIT (PDU)	
48	EA	FURNISH AND INSTALL TERMINATED FIBER CONNECTOR (SC TYPE)	

PROFESSIONAL CIVIL ENGINEER
BRYAN E. [illegible]
E-13003
STATE OF NEBRASKA

NOT TO SCALE

INTERNAL FIBER PLAN

FILENAME: X:_C3D 2015 PROJECTS\MAPA-5023(17) Conduit at Various Fire Stations\CAD\Base Drawings\OPW XXXXX Fiber Install Plans.dwg
DATE PLOTTED: 7/29/2016 3:59 PM DRAWN BY: TLJ PLOT SCALE: 50:1

FIRE STATION #43 5505 N 103RD ST

PROJECT NO.	SHEET NO.
MAPA-5023(17)	16
C.N. 22608	

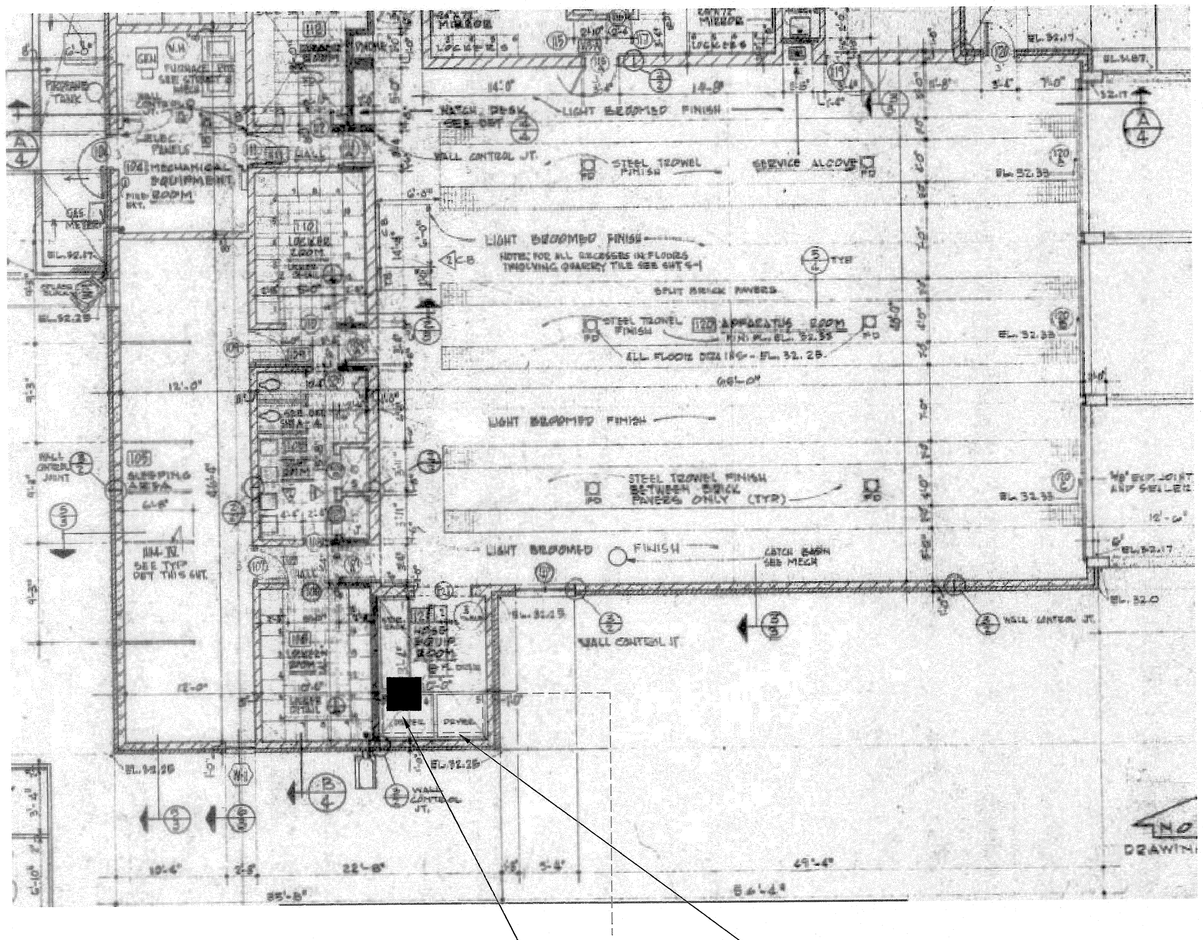

1 EA FURNISH AND INSTALL ENCLOSED WALL MOUNTED CABINET - 24U
1 EA FURNISH AND INSTALL RACK MOUNTED FIBER DISTRIBUTION UNIT (FDU) - 96 FIBER
1 EA FURNISH AND INSTALL POWER DISTRIBUTION UNIT (PDU)
1 EA BATTERY BACK-UP UNIT
48 EA FURNISH AND INSTALL TERMINATED FIBER CONNECTOR (SC TYPE)

50' (2" EXISTING)
2-FURNISH AND INSTALL SINGLE MODE FIBER OPTIC CABLE - 48 STRAND

INTERCONNECT NOTES
1. CONTRACTOR TO INSTALL WALL MOUNTED ENCLOSURE AS INDICATED ON THE PLANS. ANY MODIFICATIONS SHALL BE APPROVED BY THE ENGINEER.
2. CONTRACTOR SHALL INSTALL ALL NECESSARY FIBER OPTIC DISTRIBUTION UNITS, PATCH CABLES, AND OTHER ACCESSORIES AND MATERIALS TO MAKE THE SYSTEM OPERATIONAL.
3. CONTRACTOR SHALL COORDINATE, CHECK, AND TEST THE SYSTEM OPERATION ON THE EMERGENCY POWER SUPPLY. WHERE THE EMERGENCY POWER SUPPLY IS NOT INCLUDED, THE CONTRACTOR SHALL INSTALL BATTERY BACK-UP SYSTEM AS SHOWN IN THE PLANS.
4. CONTRACTOR SHALL SPLICE AND TEST ALL FIBER OPTIC CABLES AS SHOWN IN THE PLANS AND DESCRIBED IN THE SPECIAL PROVISIONS.

SHEET QUANTITIES

QNTY	UNIT	ITEM	REMARKS
100	LF	FURNISH AND INSTALL SINGLE MODE FIBER OPTIC CABLE - 48 STRAND	
1	EA	FURNISH AND INSTALL ENCLOSED WALL MOUNTED CABINET - 24U	
1	EA	FURNISH AND INSTALL RACK MOUNTED FIBER DISTRIBUTION UNIT (FDU) - 96 FIBER	
1	EA	FURNISH AND INSTALL POWER DISTRIBUTION UNIT (PDU)	
1	EA	BATTERY BACK-UP UNIT	
48	EA	FURNISH AND INSTALL TERMINATED FIBER CONNECTOR (SC TYPE)	

PROFESSIONAL CIVIL ENGINEER
BRYAN R. GUY
E-13003
9/14/16
STATE OF NEBRASKA

NOT TO SCALE

INTERNAL FIBER PLAN

FILENAME: X:_C3D 2015 PROJECTS\MAPA-5023(17) Conduit at Various Fire Stations\CAD\Base Drawings\OPW XXXX Fiber Install Plans.dwg
DATE PLOTTED: 7/29/2016 4:00 PM DRAWN BY: TLJ PLOT SCALE: 50:1

PROJECT NO.	SHEET NO.
MAPA-5023(17)	17
C.N. 22608	

FIRE STATION #52 10727 PACIFIC ST

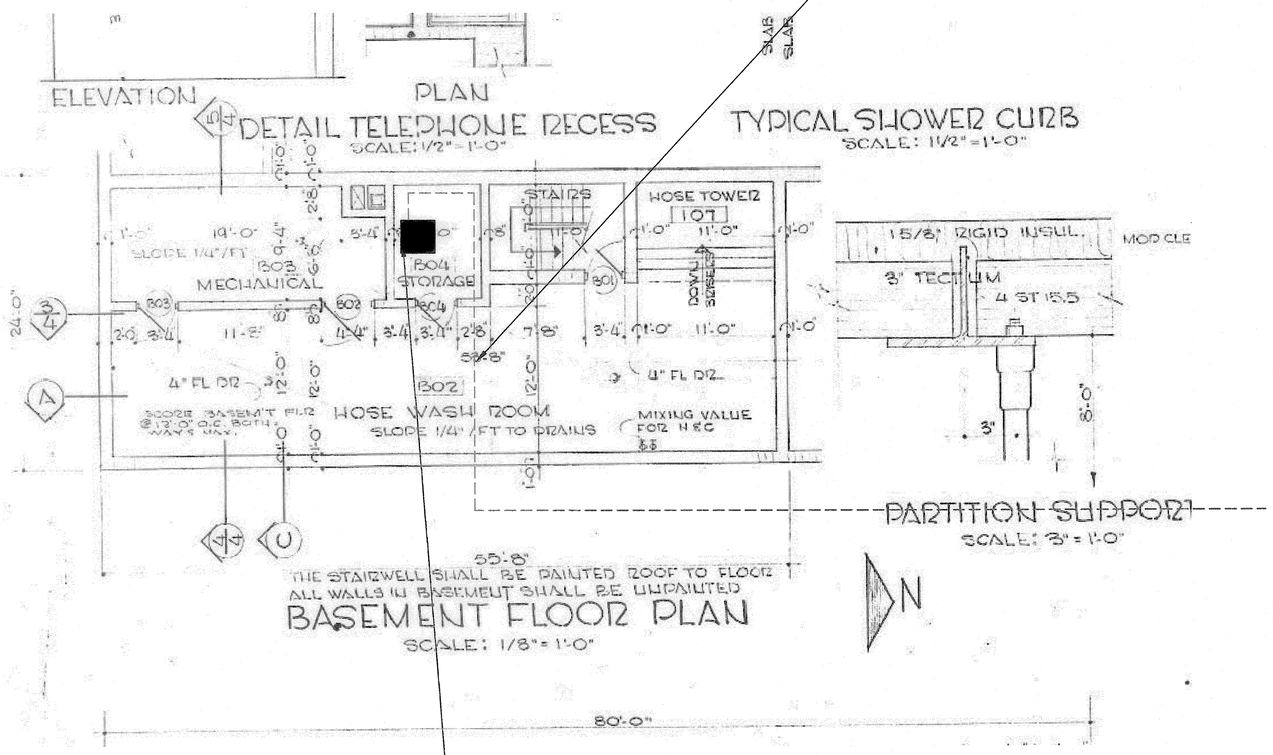

50' (2" EXISTING)
2-FURNISH AND INSTALL SINGLE MODE FIBER OPTIC CABLE - 48 STRAND

1 EA FURNISH AND INSTALL ENCLOSED WALL MOUNTED CABINET - 24U
1 EA FURNISH AND INSTALL RACK MOUNTED FIBER DISTRIBUTION UNIT (FDU) - 96 FIBER
1 EA FURNISH AND INSTALL POWER DISTRIBUTION UNIT (PDU)
1 EA BATTERY BACK-UP UNIT
48 EA FURNISH AND INSTALL TERMINATED FIBER CONNECTOR (SC TYPE)

INTERCONNECT NOTES
1. CONTRACTOR TO INSTALL WALL MOUNTED ENCLOSURE AS INDICATED ON THE PLANS. ANY MODIFICATIONS SHALL BE APPROVED BY THE ENGINEER.
2. CONTRACTOR SHALL INSTALL ALL NECESSARY FIBER OPTIC DISTRIBUTION UNITS, PATCH CABLES, AND OTHER ACCESSORIES AND MATERIALS TO MAKE THE SYSTEM OPERATIONAL.
3. CONTRACTOR SHALL COORDINATE, CHECK, AND TEST THE SYSTEM OPERATION ON THE EMERGENCY POWER SUPPLY. WHERE THE EMERGENCY POWER SUPPLY IS NOT INCLUDED, THE CONTRACTOR SHALL INSTALL BATTERY BACK-UP SYSTEM AS SHOWN IN THE PLANS.
4. CONTRACTOR SHALL SPLICE AND TEST ALL FIBER OPTIC CABLES AS SHOWN IN THE PLANS AND DESCRIBED IN THE SPECIAL PROVISIONS.

SHEET QUANTITIES			
QNTY	UNIT	ITEM	REMARKS
100	LF	FURNISH AND INSTALL SINGLE MODE FIBER OPTIC CABLE - 48 STRAND	
1	EA	FURNISH AND INSTALL ENCLOSED WALL MOUNTED CABINET - 24U	
1	EA	FURNISH AND INSTALL RACK MOUNTED FIBER DISTRIBUTION UNIT (FDU) - 96 FIBER	
1	EA	FURNISH AND INSTALL POWER DISTRIBUTION UNIT (PDU)	
1	EA	BATTERY BACK-UP UNIT	
48	EA	FURNISH AND INSTALL TERMINATED FIBER CONNECTORS (SC TYPE)	

PROFESSIONAL CIVIL ENGINEER
BRYAN P. [illegible]
E-13003
9/14/16
STATE OF NEBRASKA

NOT TO SCALE

INTERNAL FIBER PLAN

FILENAME: X:_C3D 2015 PROJECTS\MAPA-5023(17) Conduit at Various Fire Stations\CAD\Base Drawings\OPW XXXXX Fiber Install Plans.dwg
DATE PLOTTED: 7/29/2016 3:58 PM DRAWN BY: TLJ PLOT SCALE: 50:1

PROJECT NO.	SHEET NO.
MAPA-5023(17)	18
C.N. 22608	

FIRE STATION #53 8001 DODGE ST

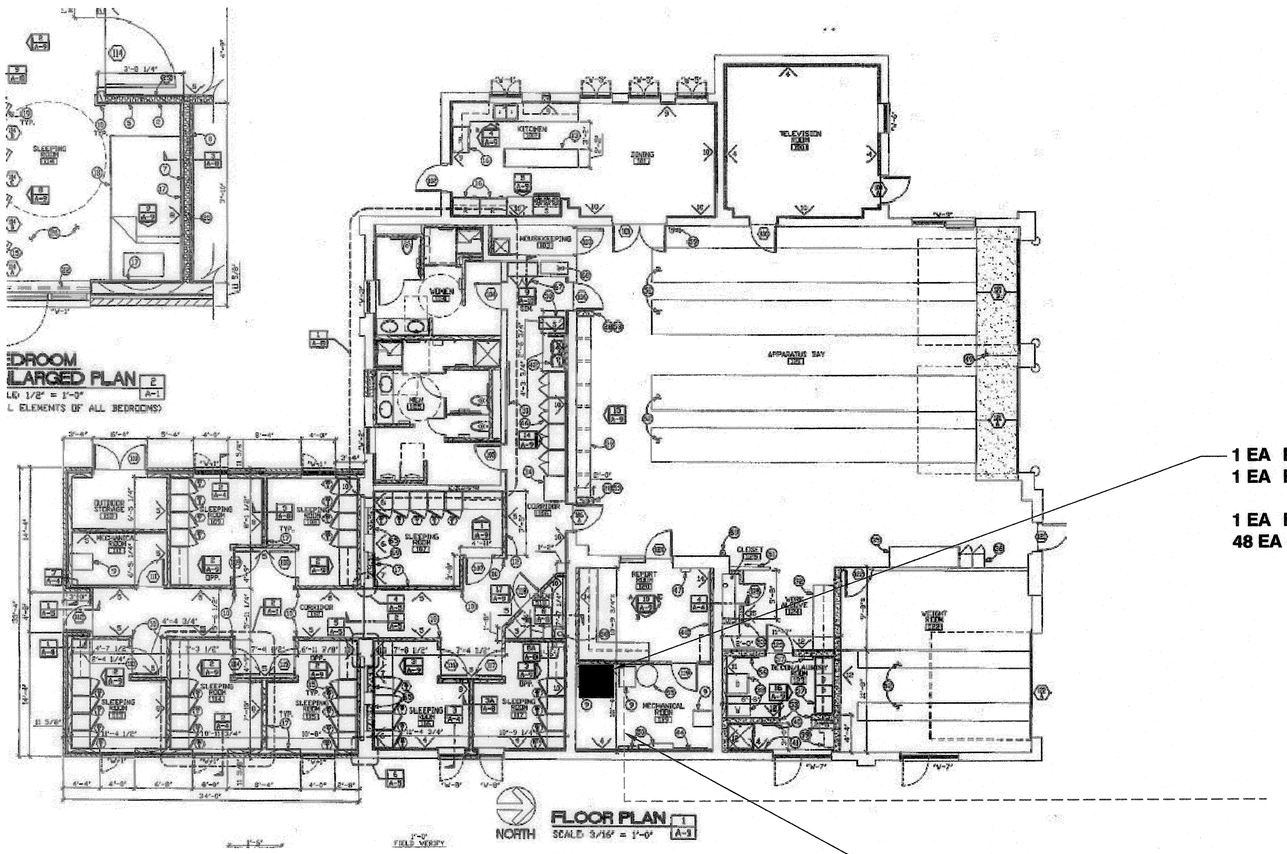

INTERCONNECT NOTES
1. CONTRACTOR TO INSTALL WALL MOUNTED ENCLOSURE AS INDICATED ON THE PLANS. ANY MODIFICATIONS SHALL BE APPROVED BY THE ENGINEER.
2. CONTRACTOR SHALL INSTALL ALL NECESSARY FIBER OPTIC DISTRIBUTION UNITS, PATCH CABLES, AND OTHER ACCESSORIES AND MATERIALS TO MAKE THE SYSTEM OPERATIONAL.
3. CONTRACTOR SHALL COORDINATE, CHECK, AND TEST THE SYSTEM OPERATION ON THE EMERGENCY POWER SUPPLY. WHERE THE EMERGENCY POWER SUPPLY IS NOT INCLUDED, THE CONTRACTOR SHALL INSTALL BATTERY BACK-UP SYSTEM AS SHOWN IN THE PLANS.
4. CONTRACTOR SHALL SPLICE AND TEST ALL FIBER OPTIC CABLES AS SHOWN IN THE PLANS AND DESCRIBED IN THE SPECIAL PROVISIONS.

1 EA FURNISH AND INSTALL ENCLOSED WALL MOUNTED CABINET - 24U
1 EA FURNISH AND INSTALL RACK MOUNTED FIBER DISTRIBUTION UNIT (FDU) - 96 FIBER
1 EA FURNISH AND INSTALL POWER DISTRIBUTION UNIT (PDU)
48 EA FURNISH AND INSTALL TERMINATED FIBER CONNECTOR (SC TYPE)

SHEET QUANTITIES

QNTY	UNIT	ITEM	REMARKS
80	LF	FURNISH AND INSTALL SINGLE MODE FIBER OPTIC CABLE - 48 STRAND	
1	EA	FURNISH AND INSTALL ENCLOSED WALL MOUNTED CABINET - 24U	
1	EA	FURNISH AND INSTALL RACK MOUNTED FIBER DISTRIBUTION UNIT (FDU) - 96 FIBER	
1	EA	FURNISH AND INSTALL POWER DISTRIBUTION UNIT (PDU)	
48	EA	FURNISH AND INSTALL TERMINATED FIBER CONNECTORS (SC TYPE)	

40' (2" EXISTING)
2-FURNISH AND INSTALL SINGLE MODE FIBER OPTIC CABLE - 48 STRAND

PROFESSIONAL CIVIL ENGINEER
BRYAN R. GUY
E-13003
2/14/16
STATE OF NEBRASKA

NOT TO SCALE

INTERNAL FIBER PLAN

FILENAME: X:_C3D 2015 PROJECTS\MAPA-5023(17) Conduit at Various Fire Stations\CAD\Base Drawings\CPW XXXXX Fiber Install Plans.dwg
DATE PLOTTED: 7/29/2016 3:57 PM DRAWN BY: TLJ PLOT SCALE: 50:1

PROJECT NO.	SHEET NO.
MAPA-5023(17)	19
C.N. 22608	

FIRE STATION #63 16736 S ST

N

70' (2" EXISTING)
3-FURNISH AND INSTALL SINGLE MODE FIBER OPTIC CABLE - 48 STRAND

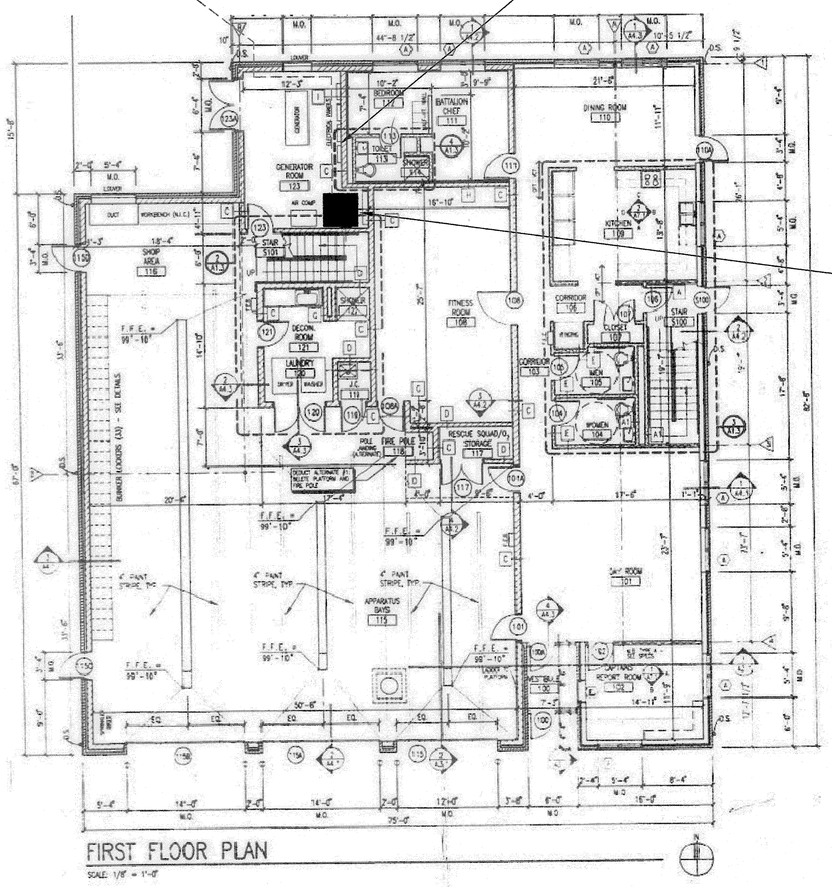

1 EA FURNISH AND INSTALL ENCLOSED WALL MOUNTED CABINET - 24U
1 EA FURNISH AND INSTALL RACK MOUNTED FIBER DISTRIBUTION UNIT (FDU) - 96 FIBER
1 EA FURNISH AND INSTALL POWER DISTRIBUTION UNIT (PDU)
48 EA FURNISH AND INSTALL TERMINATED FIBER CONNECTOR (SC TYPE)

INTERCONNECT NOTES
1. CONTRACTOR TO INSTALL WALL MOUNTED ENCLOSURE AS INDICATED ON THE PLANS. ANY MODIFICATIONS SHALL BE APPROVED BY THE ENGINEER.
2. CONTRACTOR SHALL INSTALL ALL NECESSARY FIBER OPTIC DISTRIBUTION UNITS, PATCH CABLES, AND OTHER ACCESSORIES AND MATERIALS TO MAKE THE SYSTEM OPERATIONAL.
3. CONTRACTOR SHALL COORDINATE, CHECK, AND TEST THE SYSTEM OPERATION ON THE EMERGENCY POWER SUPPLY. WHERE THE EMERGENCY POWER SUPPLY IS NOT INCLUDED, THE CONTRACTOR SHALL INSTALL BATTERY BACK-UP SYSTEM AS SHOWN IN THE PLANS.
4. CONTRACTOR SHALL SPLICE AND TEST ALL FIBER OPTIC CABLES AS SHOWN IN THE PLANS AND DESCRIBED IN THE SPECIAL PROVISIONS.

SHEET QUANTITIES

QNTY	UNIT	ITEM	REMARKS
210	LF	FURNISH AND INSTALL SINGLE MODE FIBER OPTIC CABLE - 48 STRAND	
1	EA	FURNISH AND INSTALL ENCLOSED WALL MOUNTED CABINET - 24U	
1	EA	FURNISH AND INSTALL RACK MOUNTED FIBER DISTRIBUTION UNIT (FDU) - 96 FIBER	
1	EA	FURNISH AND INSTALL POWER DISTRIBUTION UNIT (PDU)	
48	EA	FURNISH AND INSTALL TERMINATED FIBER CONNECTORS (SC TYPE)	

PROFESSIONAL CIVIL ENGINEER
BRYAN P. [illegible]
E-13003
STATE OF NEBRASKA
7/14/16

NOT TO SCALE

INTERNAL FIBER PLAN

FILENAME: X:_C3D 2015 PROJECTS\MAPA-5023(17) Conduit at Various Fire Stations\CAD\Base Drawings\OPW XXXXX Fiber Install Plans.dwg
DATE PLOTTED: 8/1/2016 4:43 PM DRAWN BY: TLJ PLOT SCALE: 50:1

FIRE STATION #71 20474 LARAMIE RD

PROJECT NO.	SHEET NO.
MAPA-5023(17)	20
C.N. 22608	

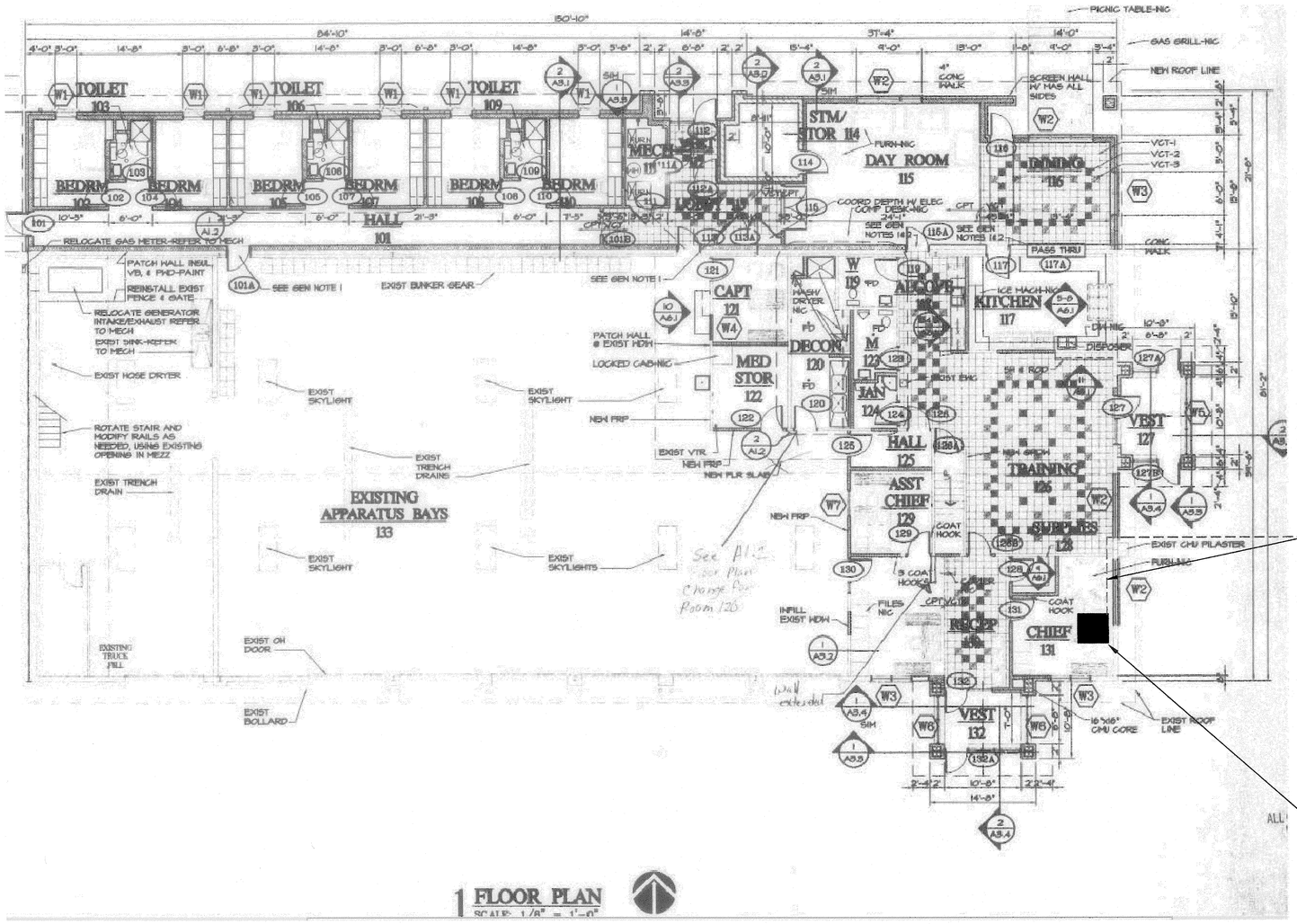

1 FLOOR PLAN
SCALE: 1/8" = 1'-0"

INTERCONNECT NOTES
1. CONTRACTOR TO INSTALL WALL MOUNTED ENCLOSURE AS INDICATED ON THE PLANS. ANY MODIFICATIONS SHALL BE APPROVED BY THE ENGINEER.
2. CONTRACTOR SHALL INSTALL ALL NECESSARY FIBER OPTIC DISTRIBUTION UNITS, PATCH CABLES, AND OTHER ACCESSORIES AND MATERIALS TO MAKE THE SYSTEM OPERATIONAL.
3. CONTRACTOR SHALL COORDINATE, CHECK, AND TEST THE SYSTEM OPERATION ON THE EMERGENCY POWER SUPPLY. WHERE THE EMERGENCY POWER SUPPLY IS NOT INCLUDED, THE CONTRACTOR SHALL INSTALL BATTERY BACK-UP SYSTEM AS SHOWN IN THE PLANS.
4. CONTRACTOR SHALL SPLICE AND TEST ALL FIBER OPTIC CABLES AS SHOWN IN THE PLANS AND DESCRIBED IN THE SPECIAL PROVISIONS.

30' (2" EXISTING)
2-FURNISH AND INSTALL SINGLE MODE FIBER OPTIC CABLE - 48 STRAND

1 EA FURNISH AND INSTALL ENCLOSED WALL MOUNTED CABINET - 24U (NOTE: CABINET LOCATION ON SECOND FLOOR OF BUILDING)
1 EA FURNISH AND INSTALL RACK MOUNTED FIBER DISTRIBUTION UNIT (FDU) - 96 FIBER
1 EA FURNISH AND INSTALL POWER DISTRIBUTION UNIT (PDU)
48 EA FURNISH AND INSTALL TERMINATED FIBER CONNECTOR (SC TYPE)

SHEET QUANTITIES			
QNTY	UNIT	ITEM	REMARKS
60	LF	FURNISH AND INSTALL SINGLE MODE FIBER OPTIC CABLE - 48 STRAND	
1	EA	FURNISH AND INSTALL ENCLOSED WALL MOUNTED CABINET - 24U	
1	EA	FURNISH AND INSTALL RACK MOUNTED FIBER DISTRIBUTION UNIT (FDU) - 96 FIBER	
1	EA	FURNISH AND INSTALL POWER DISTRIBUTION UNIT (PDU)	
48	EA	FURNISH AND INSTALL TERMINATED FIBER CONNECTORS (SC TYPE)	

PROFESSIONAL CIVIL ENGINEER
BRYAN
E-13003
STATE OF NEBRASKA
7/14/16

NOT TO SCALE

INTERNAL FIBER PLAN

FILENAME: X:_C3D 2015 PROJECTS\MAPA-5023(17) Conduit at Various Fire Stations\CAD\Base Drawings\OPW XXXXX Fiber Install Plans.dwg
DATE PLOTTED: 7/29/2016 3:56 PM DRAWN BY: TLJ PLOT SCALE: 50:1

FIRE STATION #78 2909 N 144TH ST

PROJECT NO.	SHEET NO.
MAPA-5023(17)	21
C.N. 22608	

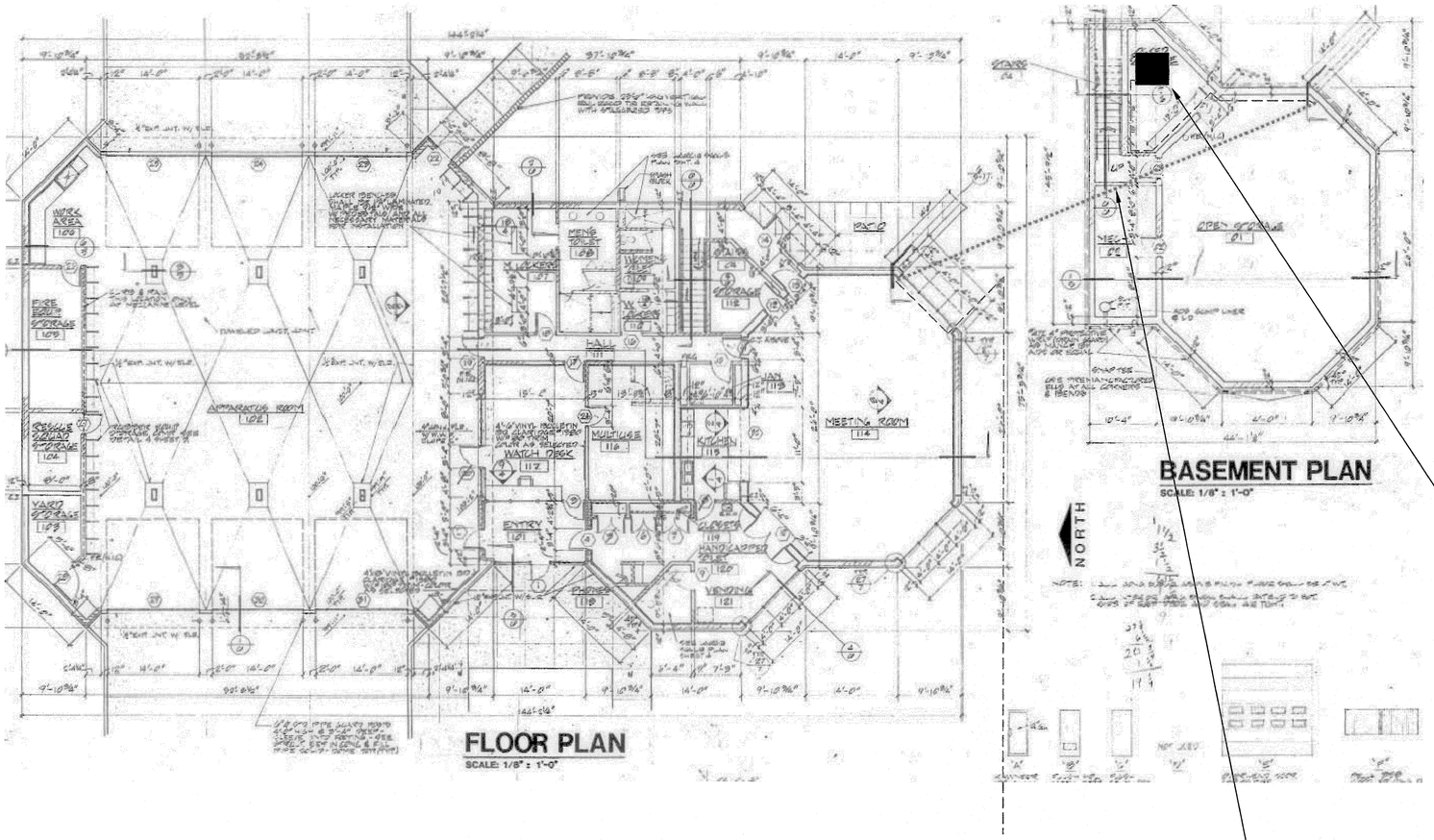

INTERCONNECT NOTES
1. CONTRACTOR TO INSTALL WALL MOUNTED ENCLOSURE AS INDICATED ON THE PLANS. ANY MODIFICATIONS SHALL BE APPROVED BY THE ENGINEER.
2. CONTRACTOR SHALL INSTALL ALL NECESSARY FIBER OPTIC DISTRIBUTION UNITS, PATCH CABLES, AND OTHER ACCESSORIES AND MATERIALS TO MAKE THE SYSTEM OPERATIONAL.
3. CONTRACTOR SHALL COORDINATE, CHECK, AND TEST THE SYSTEM OPERATION ON THE EMERGENCY POWER SUPPLY. WHERE THE EMERGENCY POWER SUPPLY IS NOT INCLUDED, THE CONTRACTOR SHALL INSTALL BATTERY BACK-UP SYSTEM AS SHOWN IN THE PLANS.
4. CONTRACTOR SHALL SPLICE AND TEST ALL FIBER OPTIC CABLES AS SHOWN IN THE PLANS AND DESCRIBED IN THE SPECIAL PROVISIONS.

1 EA FURNISH AND INSTALL ENCLOSED WALL MOUNTED CABINET - 24U
1 EA FURNISH AND INSTALL RACK MOUNTED FIBER DISTRIBUTION UNIT (FDU) - 96 FIBER
1 EA FURNISH AND INSTALL POWER DISTRIBUTION UNIT (PDU)
48 EA FURNISH AND INSTALL TERMINATED FIBER CONNECTOR (SC TYPE)

100' (2" EXISTING)
2-FURNISH AND INSTALL SINGLE MODE FIBER OPTIC CABLE - 48 STRAND
(NOTE: CONDUIT ENTERS BUILDING ON FIRST FLOOR AND PASSES THROUGH FLOOR TO BASEMENT)

SHEET QUANTITIES			
QNTY	UNIT	ITEM	REMARKS
200	LF	FURNISH AND INSTALL SINGLE MODE FIBER OPTIC CABLE - 48 STRAND	
1	EA	FURNISH AND INSTALL ENCLOSED WALL MOUNTED CABINET - 24U	
1	EA	FURNISH AND INSTALL RACK MOUNTED FIBER DISTRIBUTION UNIT (FDU) - 96 FIBER	
1	EA	FURNISH AND INSTALL POWER DISTRIBUTION UNIT (PDU)	
48	EA	FURNISH AND INSTALL TERMINATED FIBER CONNECTORS (SC TYPE)	

PROFESSIONAL CIVIL ENGINEER
BRYAN P. DAY
E-13003
7/14/16
STATE OF NEBRASKA

NOT TO SCALE

INTERNAL FIBER PLAN

FILENAME: X:_C3D 2015 PROJECTS\MAPA-5023(17) Conduit at Various Fire Stations\CAD\Base Drawings\OPW XXXXX Fiber Install Plans.dwg
DATE PLOTTED: 7/29/2016 3:55 PM DRAWN BY: TLJ PLOT SCALE: 50:1

PROJECT NO.	SHEET NO.
MAPA-5023(17)	22
C.N. 22608	

SOUTHWEST MAINTENANCE FACILITY 4040 S 96TH ST

N

70' (2" EXISTING)
2-FURNISH AND INSTALL SINGLE MODE
FIBER OPTIC CABLE - 48 STRAND

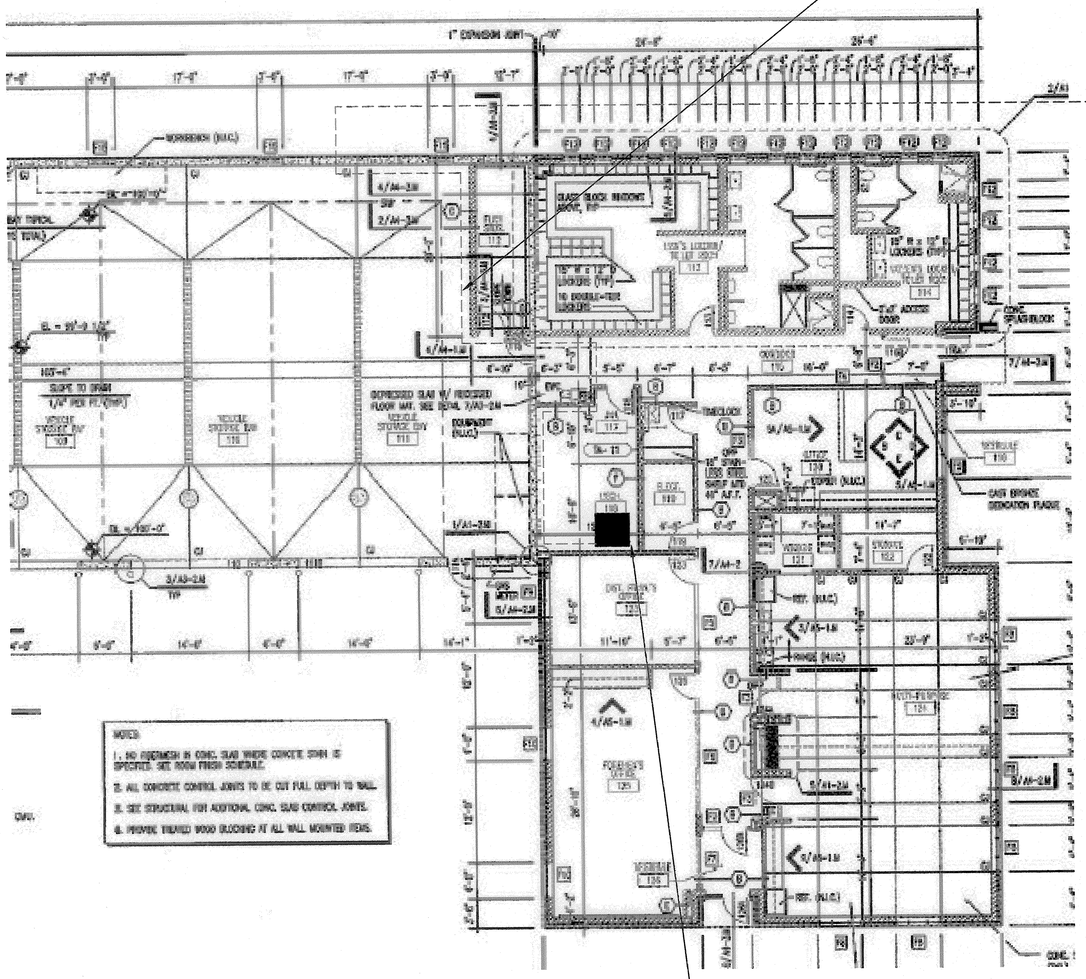

1 EA FURNISH AND INSTALL ENCLOSED WALL MOUNTED CABINET - 24U
1 EA FURNISH AND INSTALL RACK MOUNTED FIBER DISTRIBUTION UNIT (FDU) - 96 FIBER
1 EA FURNISH AND INSTALL POWER DISTRIBUTION UNIT (PDU)
1 EA BATTERY BACK-UP UNIT
48 EA FURNISH AND INSTALL TERMINATED FIBER CONNECTOR (SC TYPE)

INTERCONNECT NOTES
1. CONTRACTOR TO INSTALL WALL MOUNTED ENCLOSURE AS INDICATED ON THE PLANS. ANY MODIFICATIONS SHALL BE APPROVED BY THE ENGINEER.
2. CONTRACTOR SHALL INSTALL ALL NECESSARY FIBER OPTIC DISTRIBUTION UNITS, PATCH CABLES, AND OTHER ACCESSORIES AND MATERIALS TO MAKE THE SYSTEM OPERATIONAL.
3. CONTRACTOR SHALL COORDINATE, CHECK, AND TEST THE SYSTEM OPERATION ON THE EMERGENCY POWER SUPPLY. WHERE THE EMERGENCY POWER SUPPLY IS NOT INCLUDED, THE CONTRACTOR SHALL INSTALL BATTERY BACK-UP SYSTEM AS SHOWN IN THE PLANS.
4. CONTRACTOR SHALL SPLICE AND TEST ALL FIBER OPTIC CABLES AS SHOWN IN THE PLANS AND DESCRIBED IN THE SPECIAL PROVISIONS.

SHEET QUANTITIES			
QNTY	UNIT	ITEM	REMARKS
140	LF	FURNISH AND INSTALL SINGLE MODE FIBER OPTIC CABLE - 48 STRAND	
1	EA	FURNISH AND INSTALL ENCLOSED WALL MOUNTED CABINET - 24U	
1	EA	FURNISH AND INSTALL RACK MOUNTED FIBER DISTRIBUTION UNIT (FDU) - 96 FIBER	
1	EA	FURNISH AND INSTALL POWER DISTRIBUTION UNIT (PDU)	
1	EA	BATTERY BACK-UP UNIT	
48	EA	FURNISH AND INSTALL TERMINATED FIBER CONNECTORS (SC TYPE)	

PROFESSIONAL CIVIL ENGINEER
BRYAN P. [signature]
E-13003
STATE OF NEBRASKA

NOT TO SCALE

INTERNAL FIBER PLAN

ILENAME: X:_C3D 2015 PROJECTS\MAPA-5023(17) Conduit at Various Fire Stations\CAD\Base
rawings\OPW XXXXX Fiber Install Plans.dwg
ATE PLOTTED: 7/29/2016 3:53 PM DRAWN BY: TLJ PLOT SCALE: 50:1

FIRE STATION #1 1516 JACKSON ST.

PROJECT NO.	SHEET NO.
MAPA-5023(17)	23
C.N. 22606	

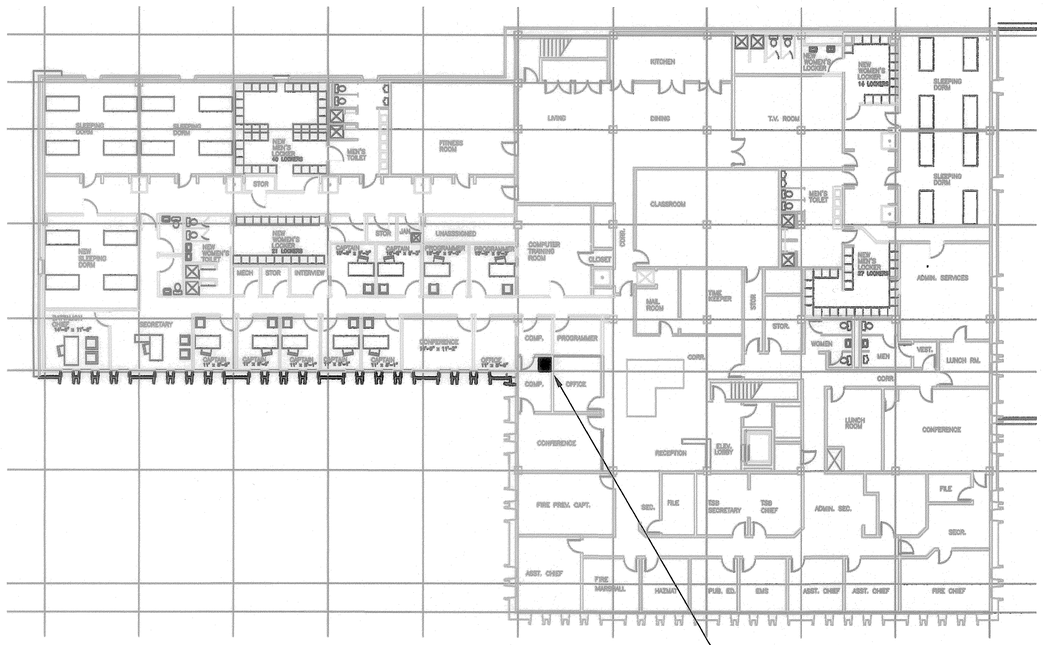

FLOOR PLAN

NORTH SCALE 1/16" = 1' - 0"

INTERCONNECT NOTES
1. CONTRACTOR TO INSTALL WALL MOUNTED ENCLOSURE AS INDICATED ON THE PLANS. ANY MODIFICATIONS SHALL BE APPROVED BY THE ENGINEER.
2. CONTRACTOR SHALL INSTALL ALL NECESSARY FIBER OPTIC DISTRIBUTION UNITS, PATCH CABLES, AND OTHER ACCESSORIES AND MATERIALS TO MAKE THE SYSTEM OPERATIONAL.
3. CONTRACTOR SHALL COORDINATE, CHECK, AND TEST THE SYSTEM OPERATION ON THE EMERGENCY POWER SUPPLY. WHERE THE EMERGENCY POWER SUPPLY IS NOT INCLUDED, THE CONTRACTOR SHALL INSTALL BATTERY BACK-UP SYSTEM AS SHOWN IN THE PLANS.
4. CONTRACTOR SHALL SPLICE AND TEST ALL FIBER OPTIC CABLES AS SHOWN IN THE PLANS AND DESCRIBED IN THE SPECIAL PROVISIONS.

SHEET QUANTITIES

QNTY	UNIT	ITEM	REMARKS
1	EA	FURNISH AND INSTALL ENCLOSED WALL MOUNTED CABINET - 24U	
1	EA	FURNISH AND INSTALL RACK MOUNTED FIBER DISTRIBUTION UNIT (FDU) - 96 FIBER	
1	EA	FURNISH AND INSTALL POWER DISTRIBUTION UNIT (PDU)	
48	EA	FURNISH AND INSTALL TERMINATED FIBER CONNECTOR (SC TYPE)	

1 EA FURNISH AND INSTALL ENCLOSED WALL MOUNTED CABINET - 24U
1 EA FURNISH AND INSTALL RACK MOUNTED FIBER DISTRIBUTION UNIT (FDU) - 96 FIBER
1 EA FURNISH AND INSTALL POWER DISTRIBUTION UNIT (PDU)
48 EA FURNISH AND INSTALL TERMINATED FIBER CONNECTOR (SC TYPE)

PROFESSIONAL CIVIL ENGINEER
BRYAN P. [illegible]
E-13003
9/14/16
STATE OF NEBRASKA

FILENAME: X:_C3D 2015 PROJECTS\MAPA-5023(17) Conduit at Various Fire Stations\CAD\Base Drawings\OPW XXXX Fiber Install Plans.dwg
DATE PLOTTED: 7/29/2016 3:52 PM DRAWN BY: TLJ PLOT SCALE: 50:1

NOT TO SCALE

INTERNAL FIBER PLAN

TRAFFIC MAINTENANCE FACILITY 4303 S. 50TH ST.

PROJECT NO.	SHEET NO.
MAPA-5023(17)	24
C.N. 22608	

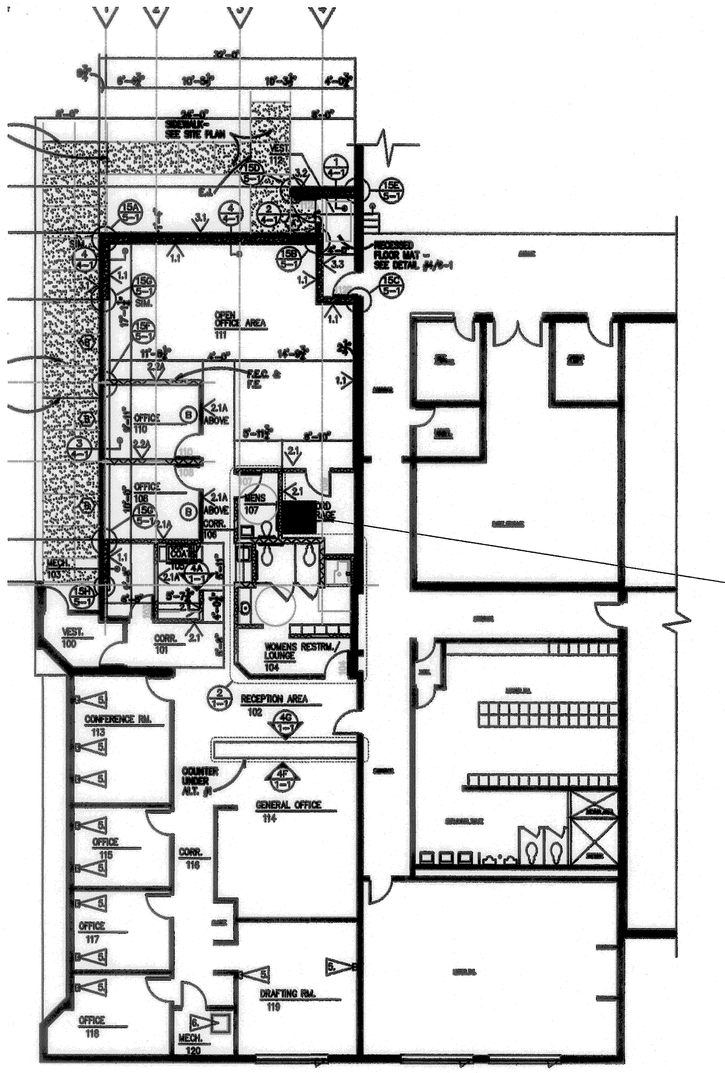

3 FLOOR PLAN

INTERCONNECT NOTES
1. CONTRACTOR SHALL INSTALL ALL NECESSARY FIBER OPTIC DISTRIBUTION UNITS, PATCH CABLES, AND OTHER ACCESSORIES AND MATERIALS TO MAKE THE SYSTEM OPERATIONAL.
2. CONTRACTOR SHALL COORDINATE, CHECK, AND TEST THE SYSTEM OPERATION ON THE EMERGENCY POWER SUPPLY. WHERE THE EMERGENCY POWER SUPPLY IS NOT INCLUDED, THE CONTRACTOR SHALL INSTALL BATTERY BACK-UP SYSTEM AS SHOWN IN THE PLANS.
3. CONTRACTOR SHALL SPLICE AND TEST ALL FIBER OPTIC CABLES AS SHOWN IN THE PLANS AND DESCRIBED IN THE SPECIAL PROVISIONS.
4. CONTRACTOR SHALL PROVIDE FIELD LAYER 3 SWITCH/ROUTERS TO TRAFFIC SHOP, TO BE INSTALLED BY OTHERS.

1 EA FURNISH AND INSTALL RACK MOUNTED FIBER DISTRIBUTION UNIT (FDU) - 96 FIBER
1 EA FURNISH AND INSTALL POWER DISTRIBUTION UNIT (PDU)
1 EA BATTERY BACK-UP UNIT
96 EA FURNISH AND INSTALL TERMINATED FIBER CONNECTOR (SC TYPE)

SHEET QUANTITIES

QNTY	UNIT	ITEM	REMARKS
1	EA	FURNISH AND INSTALL RACK MOUNTED FIBER DISTRIBUTION UNIT (FDU) - 96 FIBER	INSTALL EQUIPMENT IN EXISTING RACK
1	EA	FURNISH AND INSTALL POWER DISTRIBUTION UNIT (PDU)	INSTALL EQUIPMENT IN EXISTING RACK
1	EA	BATTERY BACK-UP UNIT	INSTALL EQUIPMENT IN EXISTING RACK
13	EA	FIELD LAYER 3 SWITCH/ROUTER	SEE SPECIAL PROVISIONS
1	EA	CIVIC CENTER LAYER 3 SWITCH/ROUTER	SEE SPECIAL PROVISIONS
96	EA	FURNISH AND INSTALL TERMINATED FIBER CONNECTORS (SC TYPE)	

PROFESSIONAL CIVIL ENGINEER
BRYAN D. GUY
E-13003
9/14/16
STATE OF NEBRASKA

FILENAME: X:_C3D 2015 PROJECTS\MAPA-5023(17) Conduit at Various Fire Stations\CAD\Base Drawings\OPW XXXXX Fiber Install Plans.dwg
DATE PLOTTED: 8/1/2016 9:08 AM DRAWN BY: TLJ PLOT SCALE: 50:1

NOT TO SCALE

INTERNAL FIBER PLAN

PROJECT NO.	SHEET NO.
MAPA-5023(17)	25
C.N. 22608	

CIVIC CENTER 1819 FARNAM ST. "C" LEVEL

INTERCONNECT NOTES
1. CONTRACTOR SHALL INSTALL ALL NECESSARY FIBER OPTIC DISTRIBUTION UNITS, PATCH CABLES, AND OTHER ACCESSORIES AND MATERIALS TO MAKE THE SYSTEM OPERATIONAL.
2. CONTRACTOR SHALL COORDINATE, CHECK, AND TEST THE SYSTEM OPERATION ON THE EMERGENCY POWER SUPPLY. WHERE THE EMERGENCY POWER SUPPLY IS NOT INCLUDED, THE CONTRACTOR SHALL INSTALL BATTERY BACK-UP SYSTEM AS SHOWN IN THE PLANS.
3. CONTRACTOR SHALL SPLICE AND TEST ALL FIBER OPTIC CABLES AS SHOWN IN THE PLANS AND DESCRIBED IN THE SPECIAL PROVISIONS.
4. CONTRACTOR SHALL PROVIDE CIVIC CENTER LAYER 3 SWITCH/ROUTER TO DOT.COMM FOR INSTALLATION

COORDINATE WITH DOT.COMM FOR FINAL INSTALLATION LOCATION

SHEET QUANTITIES			
QNTY	UNIT	ITEM	REMARKS
1	EA	FURNISH AND INSTALL RACK MOUNTED FIBER DISTRIBUTION UNIT (FDU) - 96 FIBER	
1	EA	FURNISH AND INSTALL POWER DISTRIBUTION UNIT (PDU)	
48	EA	FURNISH AND INSTALL TERMINATED FIBER CONNECTORS (SC TYPE)	

PROFESSIONAL CIVIL ENGINEER
BRYAN B. GOY
E-13003
STATE OF NEBRASKA

NOT TO SCALE

INTERNAL FIBER PLAN

FILENAME: X:_C3D 2015 PROJECTS\MAPA-5023(17) Conduit at Various Fire Stations\CAD\Base Drawings\OPW XXXXX Fiber Install Plans.dwg
DATE PLOTTED: 7/29/2016 3:50 PM DRAWN BY: TLJ PLOT SCALE: 50:1